Update on Aerosol Observing Systems

Anne Jefferson (SGP, AMF)
John Ogren (Instrument Mentor)
Betsy Andrews (IAP)
Allison McComiskey (NSA)
Sharon Lewis (data manager)
Patrick Sheridan (IAP)

NOAA/ERSL Global Monitoring Division

ARM Aerosol Working Group Meeting
San Francisco – 2 November, 2006

Aerosol Observing Systems

In-Situ surface and aircraft profile measurements of aerosol optical, chemical, size, hygroscopic and cloud-forming properties

- SGP
  - ARM central facility Lamont, OK
- AMF
  - Pt Reyes, CA 3/2005 - 9/2005
  - Niamey, Niger 12/2005-1/2007
  - Murg Valley, Germany 3/2007 -
- BRW/NSA
  - Barrow Alaska
- IAP aircraft
  - aircraft vertical profiling over SGP site

Comparison of AOS Installations

Measurement	SGP	AMF	NSA	IAP
Scattering, low RH	3-λ	3-λ	3-λ	3-λ
Scattering, f(RH)	3-λ	3-λ	Y	1-λ, 40,65,85%
Absorption	3-λ	3-λ	3-λ	3-λ
CN	Y	Y	Y	N
CCN	Y	Y	Y	N
Size distribution	Y	N	N	N
Chemical comp.	Y	N	Y	N

New additions listed in RED

Upgrades to SGP AOS

- 2005
  - 3 λ PSAP
  - HTDMA
  - build exterior pump box
- 2006
  - DMT Cloud Condensation Nuclei counter
- 2007
  - System reconfiguration
- 2008
  - add APS ??

DMT CCN Counter

- Scans 7 supersaturations every 30 minutes from 0.17% to 1.38% supersaturation

- Measures the activated droplet size in 20 size bins from 0.75 to 10 microns

- One minute integration on droplet size and % supersaturation

- Installed 13-Sept-2006

Ratio of CCN to CPC number concentrations as a function of % Supersaturation

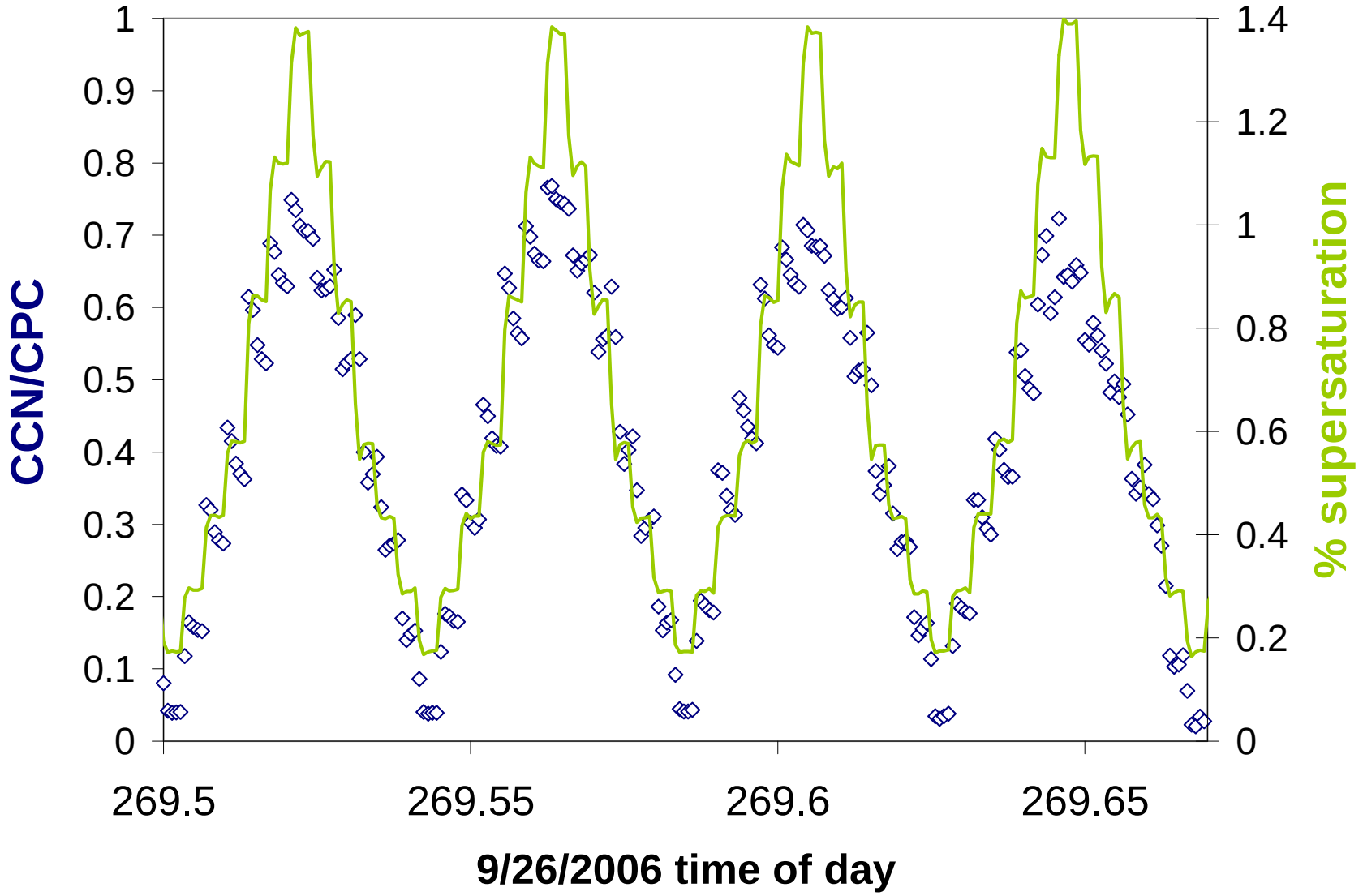

SGP AOS repackaging

- Similar design and data acquisition as NSA, AMF and IAP systems
- Easy to update and compatible data acquisition and processing
- Upgrade humidifier for better %RH control, wider range of % RH and more safety features
- remote access and control of instruments
- compact instrument package
  - shorter sample lines
  - less aerosol loss
  - better temperature and RH control
- Open and accessible design for ease of maintenance and repair
- Spare parts and electronics are identical for all AOS systems and swapable with mentor stock of spares

status of AMF AOS in Niger

- all instruments are currently working well
- rebuild of exterior pump box for next deployment
- neph circuit board and flow controller failure following a power outage in May led to data loss for first part of summer monsoon season.

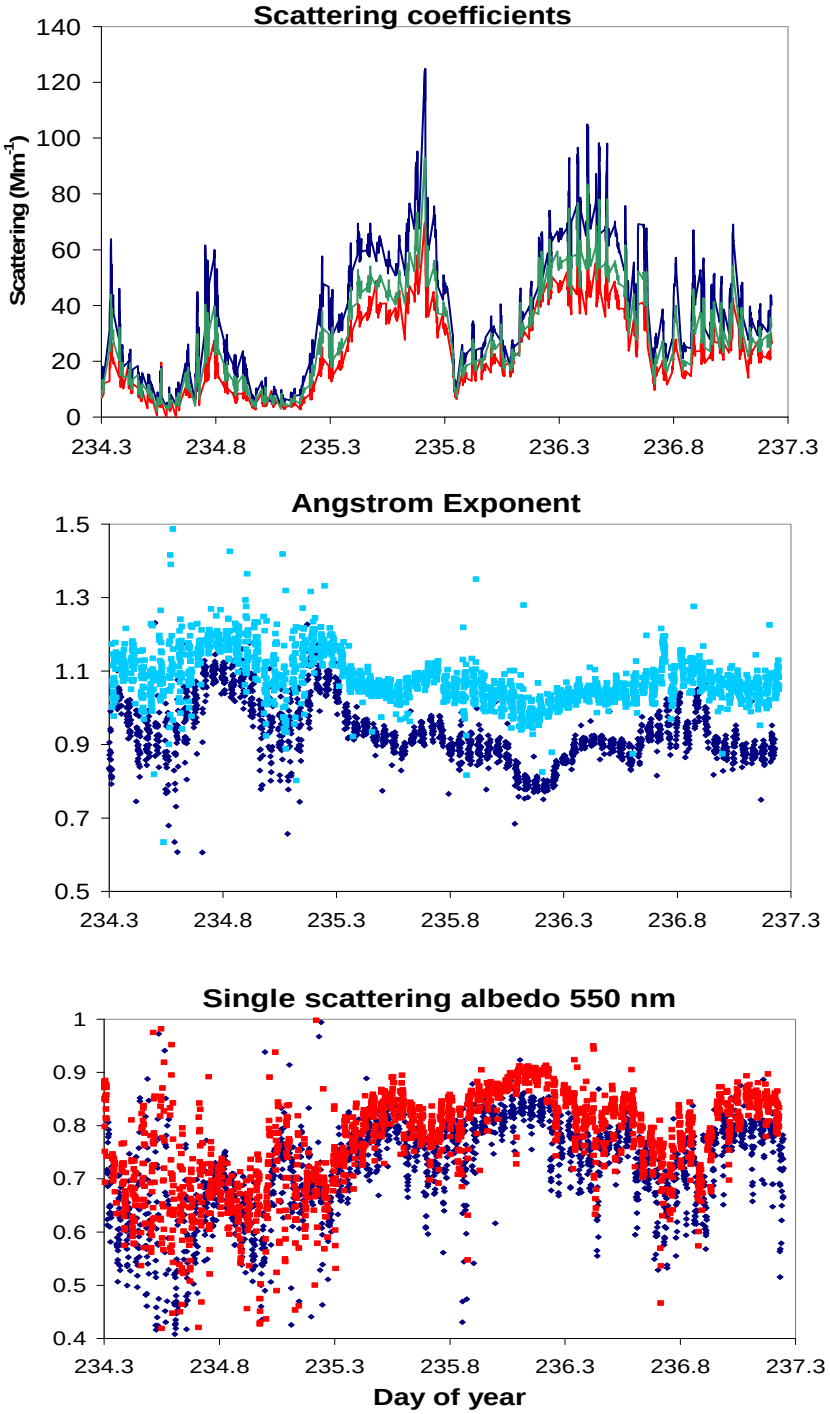

Wet Season

Dry Season

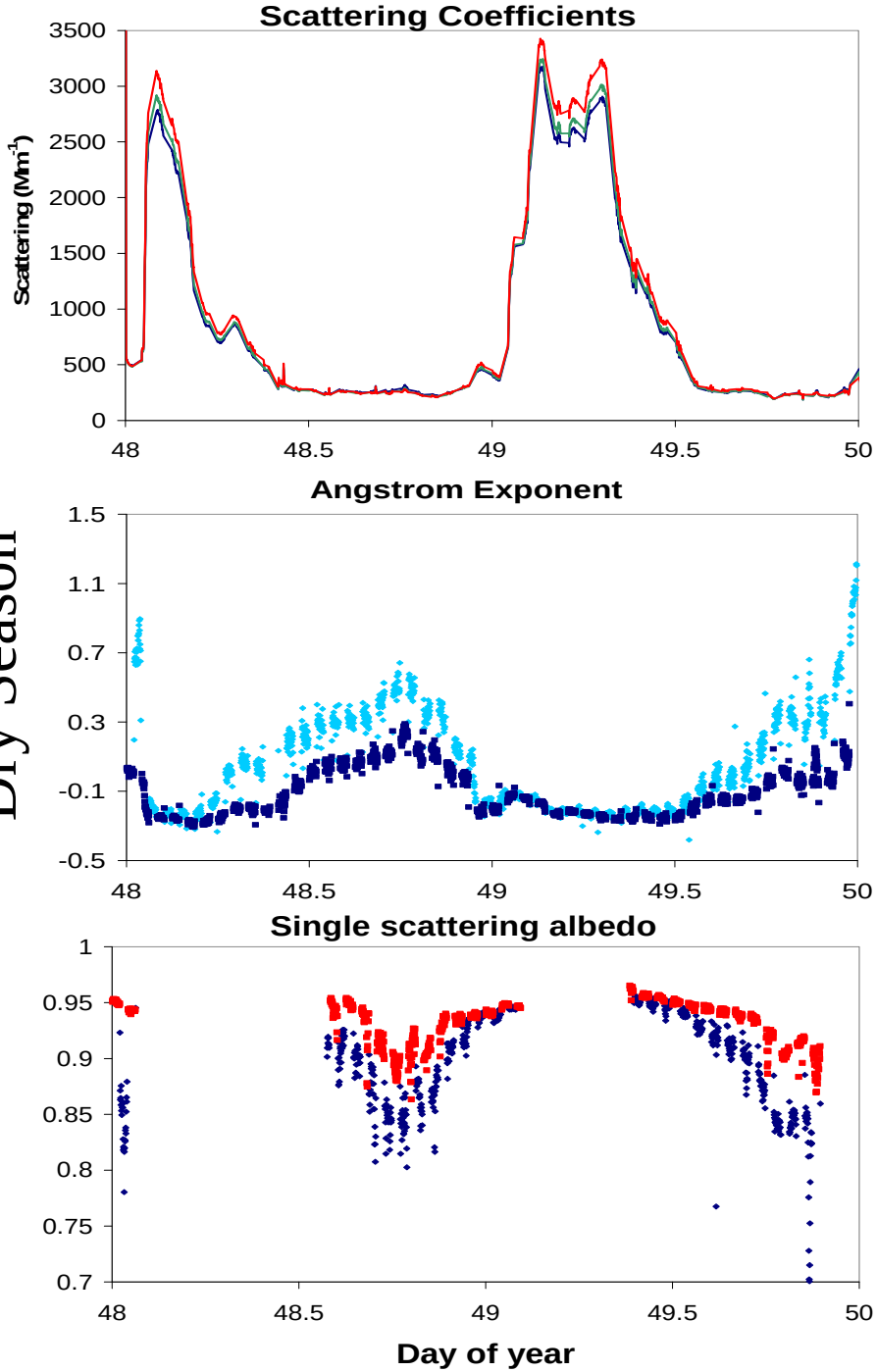

NSA repackaging

- Humidified nephelometer
- CCN measurements

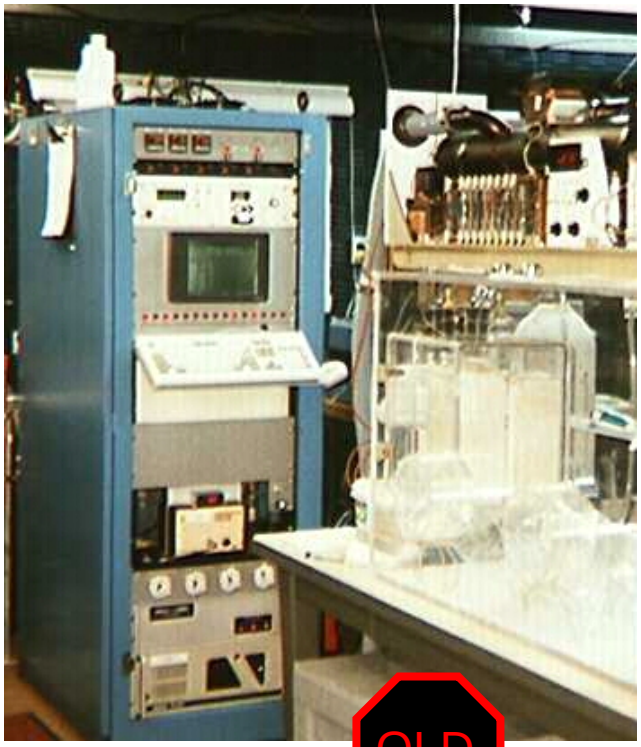

OLD

NEW!!

In-situ aerosol profiles (IAP)

- **Cessna TU206F aircraft**
- **Operating over ARM SGP CART site**
- **In operation since October 2005**
- **replaced Cessna 172XP (Mar 2000 – Oct 2005)**
- **Research velocity: 50 m sec-1**
- **Ceiling ~15kft (max. instrument payload of ~320 kgs.)**
- **Flight duration: ~4.5 hours**
- **Program has ~640 successful profile flights through September 2006**

Inlet Details

- **Shrouded diffuser inlet made of anodized aluminum with rounded leading edges (design adapted from T. Clarke, Univ. of Hawaii)**

- **Inlet plumbing is large diameter (2.22 cm I.D.) stainless steel tubing through wing**

- **Flow rate, inlet orifice size , and bend and tubing radii were chosen to minimize particle losses in inlet system**

- **Aerosol particle loss calculations indicate efficient transmission of optically important particles through inlet tubing (see plot at lower right). Turbulent deposition, diffusion, gravitational settling, and inertial impaction mechanisms were all**

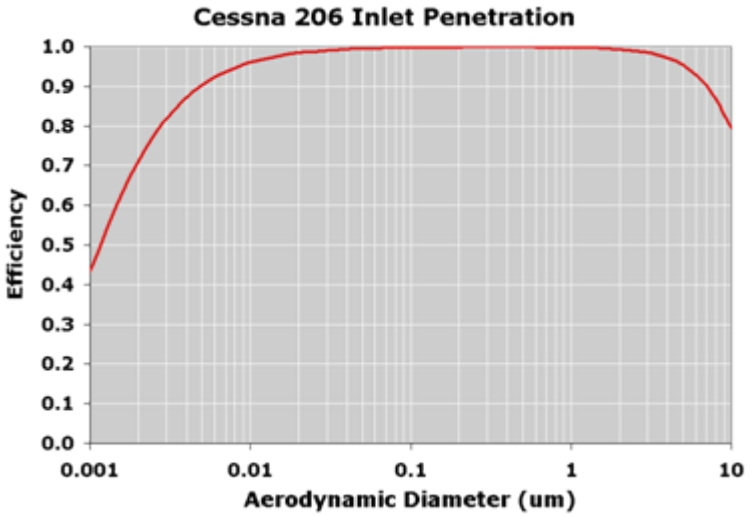

Changes to Aerosol Optics Rack

OLD

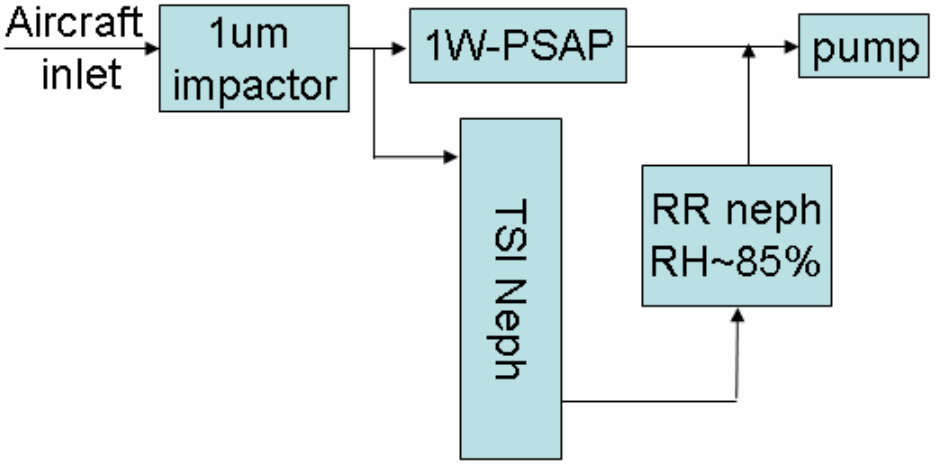

NEW

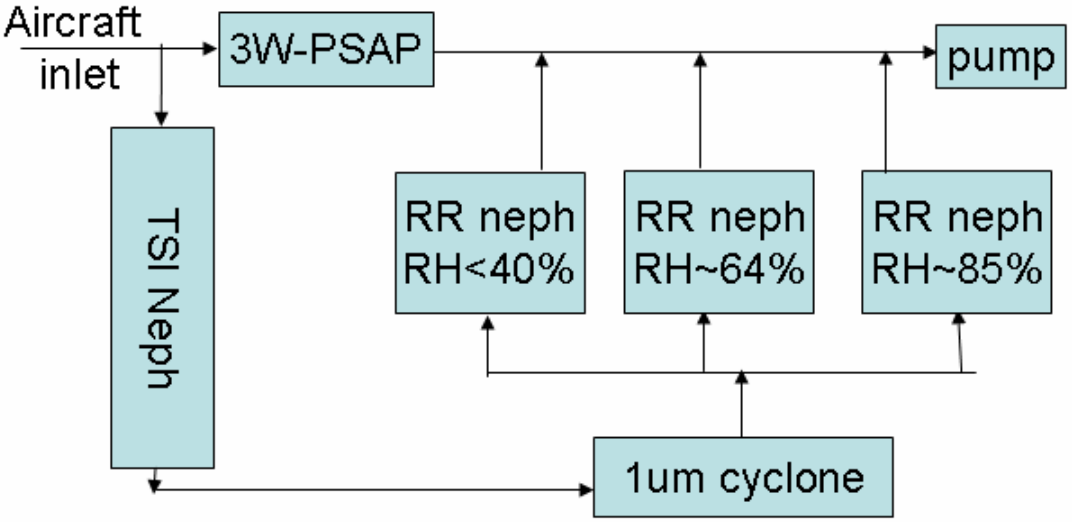

Optics Rack Layout

- TSI nephelometer to measure σ_{sp} at 3 visible wavelengths, 2 angular ranges, total aerosol size range, low RH
- Three Radiance Research nephs to measure total σ_{sp} and *f(RH)* at 545 nm for submicron aerosols.
- RR nephs held at <40%, 65% and 85% RH.
- Miniature 3-λ Particle Soot Absorption Photometer (PSAP) to measure light absorption (available in 2007)
- In addition to aerosol optics instruments, optics rack holds power inverter, 2 DC power supplies, flow measurement and control hardware, and 2 LCD monitors.

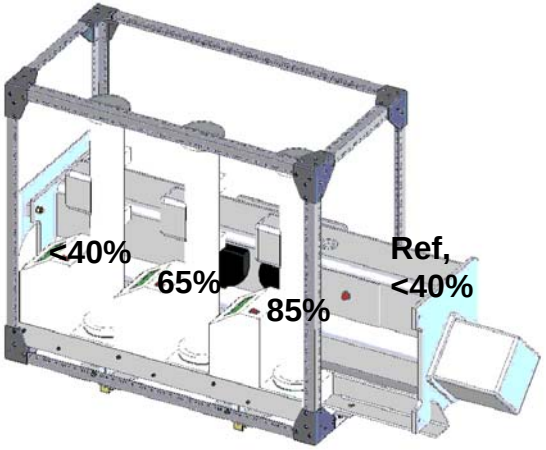

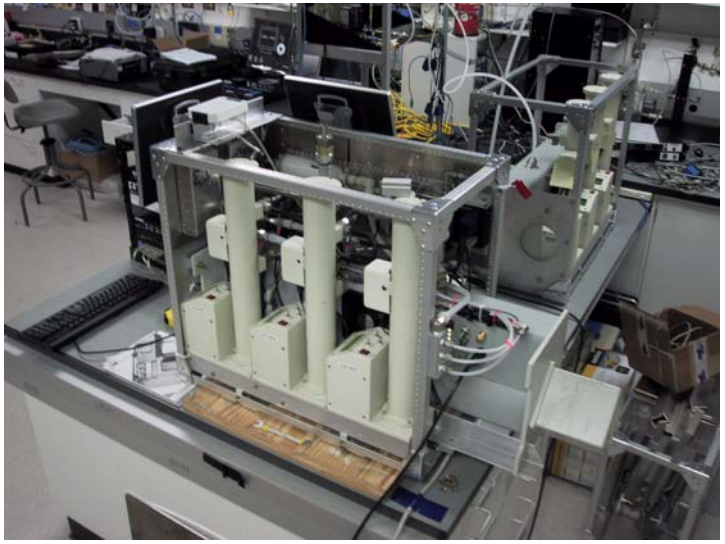

IAP Flight Frequency

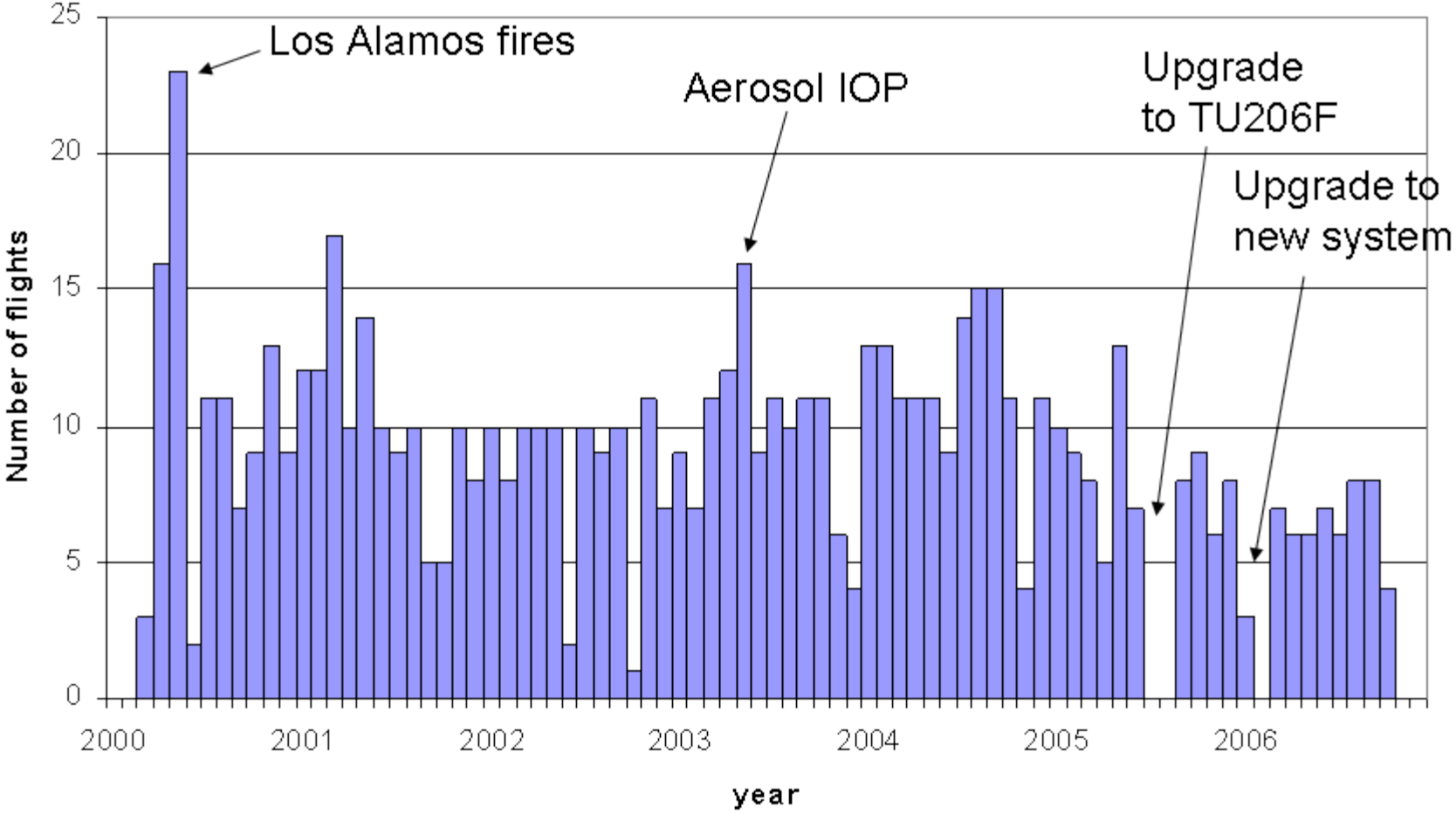

Total of 657 flights since March 2000.
Average flights/month (2000-2005) ~ 9.0
Average flights/month (2006) ~ 6.4

Vertical Profiles of σ_{ext} and ϖ_0 at SGP

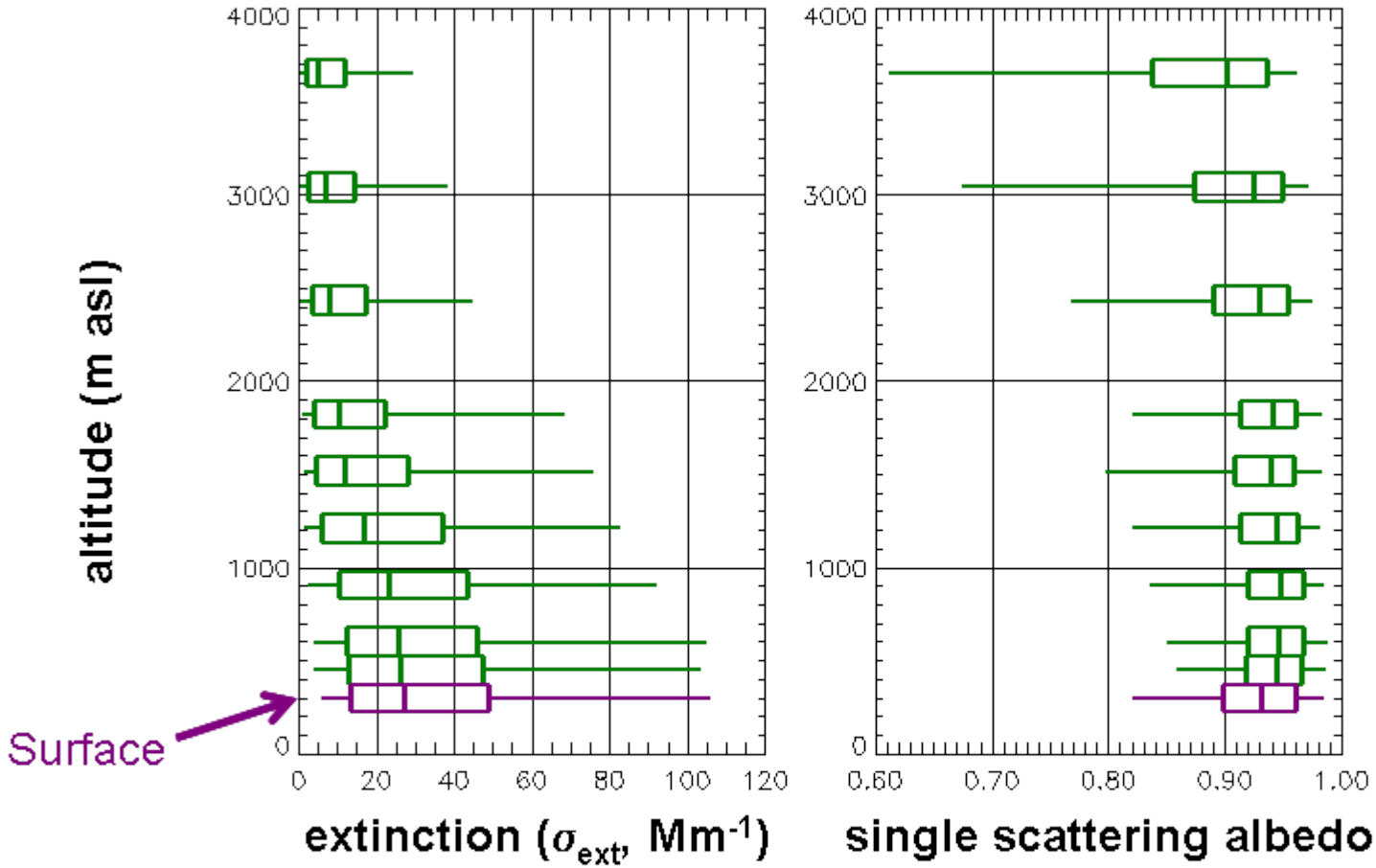

Results show that while σ_{ext} decreases with increasing altitude, ϖ_0 does not change much throughout the lower column. ϖ_0 at highest altitude is calculated from very small numbers and is therefore quite noisy.

Values are adjusted to STP and at RH < 40%, for λ = 550 nm and Dp < 1 μm, for ~500 flights between March 25, 2000 and December 31, 2004.

25th and 75th percentiles of distribution are represented by the ends of each box, 50th percentile (median) is shown by the line through the middle of the box, and the ends of the whiskers represent the 5th and 95th percentiles.

Status of IAP instruments

- high offset in high RH Radiance neph
  - work with Radiance to log raw data to troubleshoot problem in lab
  - start periodic CO_2 span checks of neph calibration
- Add Multifilter Radiometer (MFR)
- Replace the current 3-wavelength PSAP with a redesigned mini-PSAP

NOAA Airborne Aerosol Observatory

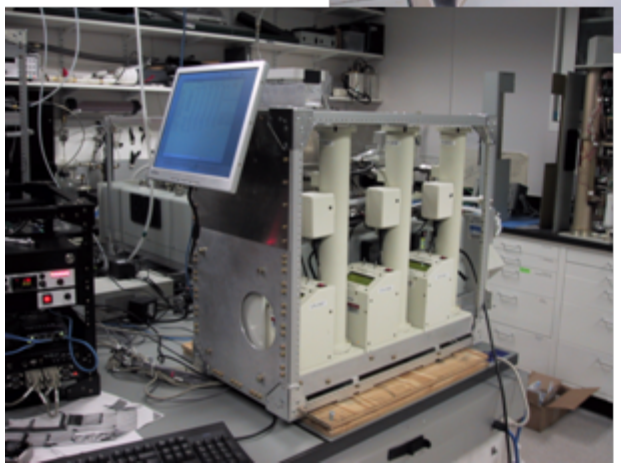

- Based at Champaign, IL
- Routine vertical profiles, 10 levels, 1.5-15kft
- Aerosol optical, chemical, microphysical, and hygroscopic growth measurements
- Trace gas (flask) and ozone (continuous) measurements
- Much more information at http://www.cmdl.noaa.gov/aero/net/aao/index.html

NOAA "AAO" Instrument Package

Aircraft: **Cessna T206H Research**
Payload: **320 kg**
Endurance: **4.5 hrs**
Ceiling (loaded): **4.7 km**

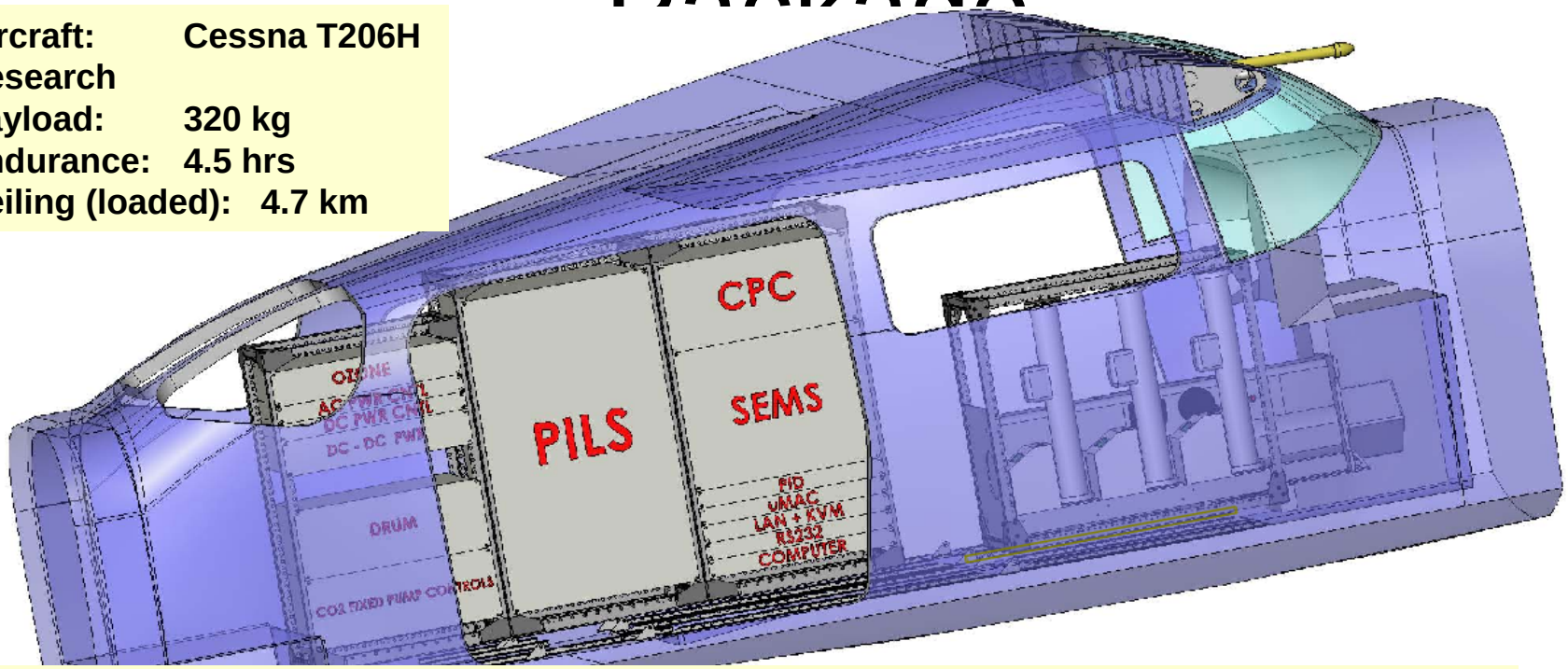

Chemical Properties

- Major ions
  - PILS sampler
  - analysis by IC
- Trace elements and total mass (planned)
  - DRUM sampler
  - analysis by PIXE, β-attenuation
- Gases (O_3, carbon-cycle flasks)

Radiative Properties

- Light scattering, backscattering, and absorption
  3 wavelengths, no size cut, <40% RH
- Scattering vs. RH
  1 wavelength, 1 μm size cut, <40%, 65%, 85% RH

Microphysical Properties

- Number concentration
  D > 10 nm
- Size distribution
  20 < D < 500 nm

AAO/Satellite Validation Studies

Scientific Objectives

- To obtain a statistically-significant data set of the vertical distribution of aerosol properties for evaluation of aerosol radiative forcing.
- To relate these properties to similar surface measurements to determine under what conditions surface measurements may be used to estimate column properties.
- To participate in the calibration and validation of aerosol remote sensing data and retrieval algorithms used by satellite sensors, including those onboard the “A-Train” Aqua and Calipso and the TERRA satellites.

A-Train satellite overpass tracks in the vicinity of the AAO base of operations. Overpasses along each track occur approx. twice per month.

Recommendations

- Aerodynamic particle sizer (APS)
- NSA vertical profiles to link aerosol above and below cloud base with the surface aerosol.