Indirect and Semi-Direct Aerosol Campaign (ISDAC) Routine in situ Cloud and Aerosol Measurements (RISCAM)

PIs: Steve Ghan and Hans Verlinde

ARM AVP: Beat Schmid, Greg McFarquhar, John Hubb

In situ measurements: Greg McFarquhar, Walter Strapp, Peter Liu, Alexei Korolev, Ann-Marie McDonald, Sarah Brooks, Don Collins, Paul Lawson, Manvendra Dubey, Greg Kok, Alex Laskin, Alla Zelenyuk

Retrievals: Connor Flynn, David Mitchell, Matthew Shupe, David Turner, Dan Lubin

Modeling: Ann Fridlind, Shaocheng Xie, Xiaohong Liu

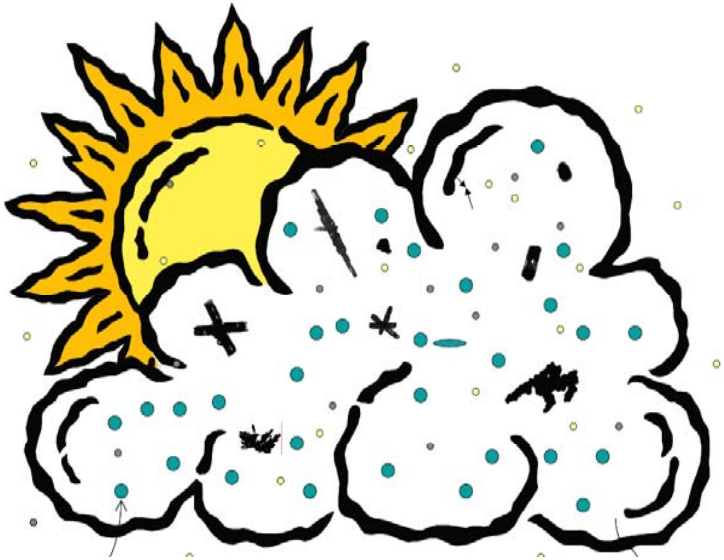

Barrow, Alaska

April-June 2008

ISDAC Key Issues

1. How do properties of the Arctic aerosol during April differ from those measured by the M-PACE during October?
2. To what extent do the different properties of the Arctic aerosol during April produce differences in the microphysical and macrophysical properties of clouds and the surface energy balance?
3. How well can cloud models and the cloud parameterizations used in climate models simulate the sensitivity of Arctic clouds and the surface energy budget to the differences in aerosol between April and October?
4. How well can long-term surface-based measurements at the ACRF Barrow site provide retrievals of aerosol, cloud, precipitation and radiative heating in the Arctic?

RISCAM Key Issues

1. What is the uncertainty in cloud properties and the associated long wave (nighttime) heating rate profiles derived from ground- based and satellite remote sensor retrieval algorithms?
2. To what extent do surface measurements of aerosol number concentrations, size distribution, and cloud-nucleating properties represent the properties of particles entering clouds at cloud base, and how does the measured cloud droplet concentration (size resolved) at the base of the (liquid) cloud correspond to the aerosol distributions?
3. What is the spatial variability of aerosol, cloud microphysical properties and vertical velocities, and how does this variability depend on microphysical properties, cloud type and synoptic classification? What is the evolving role of aerosol in the seasonal variability of cloud properties?
4. What is the response of the effective radius to environmental aerosol loading for warm clouds in the Arctic?
5. What are the surface spectral albedos and their variability over land?

ISDAC/RISCAM Instruments

Instrument	Measurements
Atmospheric State	
3 Rosemont 102 probes	Temperature
NCAR reverse flow probe	Temperature
EG7G chilled mirror hygrometer	Humidity
LICOR LIC2G2	Water vapor and CO_2 mixing ratio
Rosemount 858 gust probe	Vertical velocity
Liquid/Super-cooled Liquid	
Rosemount icing (RICE) probe	Detects supercooled liquid
Vibrameter	Detects supercooled liquid
Nevzorov LWC/TWC probe	Liquid and total condensed water concentration
CSIRO King probe	Liquid water concentration
Cloud Microphysics	
DMT Cloud Spectrometer and Imager	Total water concentration
DMT Cloud, Aerosol and Precipitation Spectrometer	Temperature, liquid water and droplet number conc., cloud particle size distribution (0.5 Š 1500 μm)
SPEC Cloud Particle Imager	Cloud particle images (15 Š 2500 μm)
PMS FSSP-100X	Small particle spectrum (3 Š 45 μm)
PMS 2D2C	Imaging cloud particles (25 Š 800 μm)
SPEC 2DS	Cloud particle size distribution (50-1000 μm)
PMS 2DP	Imaging cloud particles (200 Š 6400 μm)
Korolev Cloud Extinction Meter	Cloud Extinction

Aerosol Instruments

Instrument	Measurement
Aerosol	
Condensation Nuclei Counter	Total particle concentration (> 3 nm)
PCASP / Ultra-High Sensitivity Aerosol Spectrometer	Aerosol size distribution (100-3000 nm)
HTDMA (DMA only RISCAM)	Size-resolved aerosol hygroscopicity (15 - 600 nm)
DMT CCN counter	CCN concentration
Continuous Flow Diffusion Chamber	Ice nucleus concentration
PSAP	Mass of black carbon
Nephelometer	Optical scattering
3 laser photo-acoustic spectrometer	Aerosol absorption and scattering (405, 532 and 781 nm)
DMT Soot Photometer (SP2)*	Refractory (black carbon and dust) particle mass distribution
Aerosol Mass Spectrometer	Size-resolved aerosol composition (non-refractory)
Single particle laser ablation time of flight mass spectrometer*	Single particle size-resolved composition (refractory and non-refractory material)
Time-Resolved Aerosol Collector*	Time-resolved substrate for lab analysis (0.1 – 7 μm)
Scanning Electron Microscope (linked with TRAC)*	Single aerosol particle analysis
Aerosol Sample Collection	
Aerosol inlet	Isokinetic aerosol inlet
Counter-flow Virtual Impactor	Separation of residual aerosol

* ISDAC only

Radiometers and Remote Sensing

Instrument	Measurement
Radiometers	
Infrared Thermometer	Cloud emissivity; Nadir view, narrow field of view
Broadband visible radiometers	Hemispheric radiometers, zenith and nadir
Broadband Pyrgeometers	Hemispheric infrared fluxes, zenith and nadir view
Remote Sensing	
Ka-band up/down looking radar	Radar cross sections
ProSensing up-looking G-band radiometer	Water vapor and liquid water path above aircraft
X-band/W-band Doppler radar, dual polarization, up/down/side looking	radar cross sections, hydrometeor type identification

Aerosol Instrument Configuration

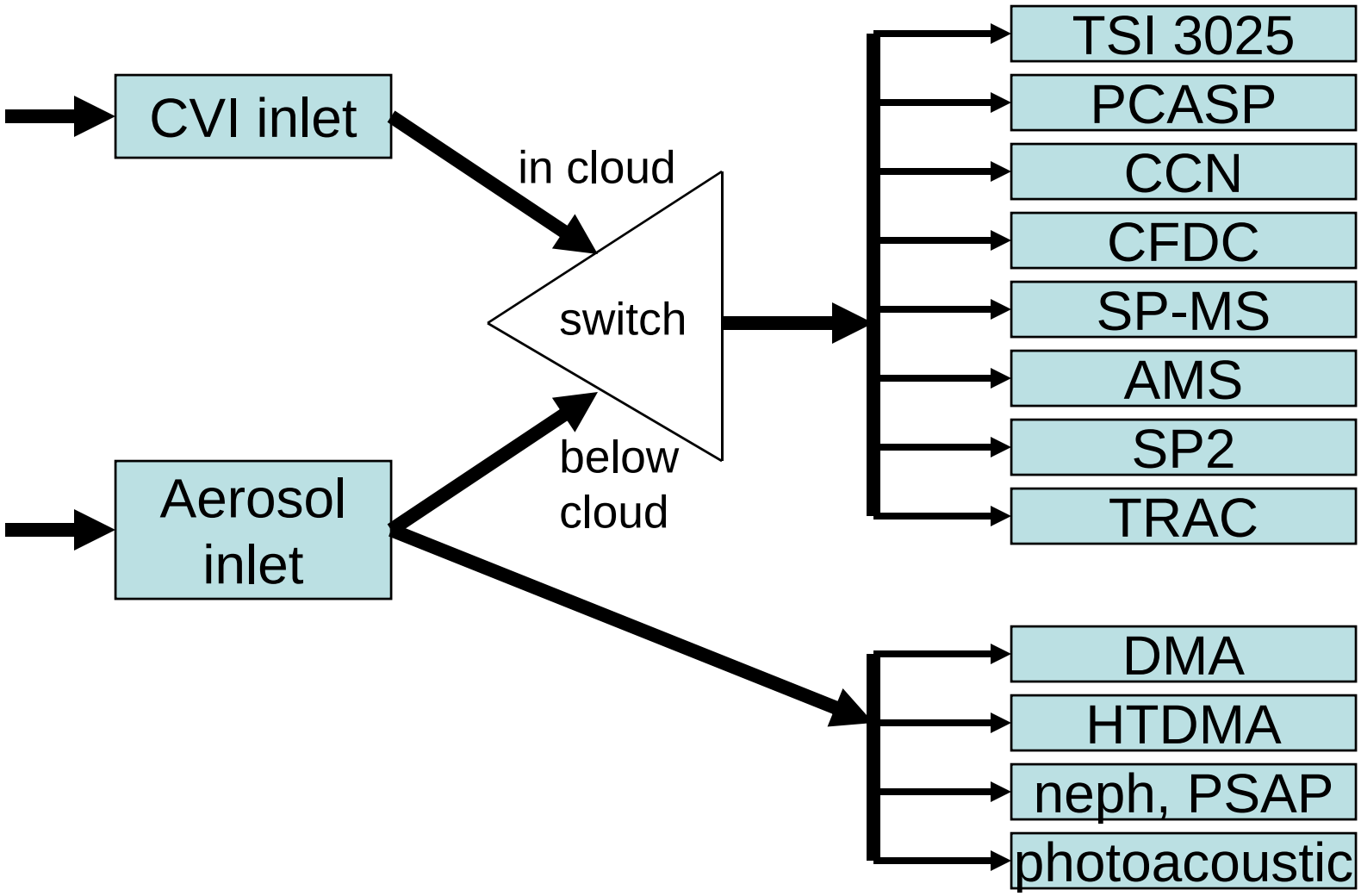

Deployment

- Instruments mounted on Canadian National Research Council Convair aircraft
- Staging from Fairbanks
- Fly to Barrow or Deadhorse each week
- Research flights out of Barrow or Deadhorse several times per week
- Return to Fairbanks for weekends, shelter, or repairs
- ISDAC: April 1-30, 2008
- RISCAM: April 1 - July 4, 2008
- 160 hours total

Applications

Experiment	Input Data	Validation data	Lead
CCN closure	Aerosol size distribution	CCN concentration	Steve Ghan
	Hygroscopicity size dist		
Droplet number closure	Aerosol size distribution	Droplet number concentration	Steve Ghan
	Hygroscopicity size dist		
	Vertical velocity		
Cloud water closure	Cloud particle size distribution	Total water content (TWC)	
Cloud extinction closure	Cloud particle size distribution	Cloud extinction	
Cloud modeling	Aerosol size distribution	Cloud particle size distribution	
	Hygroscopicity size dist	Liquid water content (LWC)	
	Ice Nuclei conc (T,S)	TWC	
	Downward longwave at top		
	u,v, T, q	precipitation	
	Surface fluxes & large-scale forcing profiles	Cloud extinction	
Semi-direct effect	Same as for cloud modeling, plus the following	Same as for cloud modeling	
	Aerosol absorption		
	Aerosol scattering		
Ice crystal nucleation	Size-resolved composition of residual aerosol	IN(T,S)	
Relation between IN and ice crystal concentration	IN(T,S_i)	Crystal size and habit	
	temperature	Cloud particle size distribution	
	humidity		
	water-ice interface		

Retrieval Applications

Experiment	Retrieval Data	Validation Data	Lead
Aerosol extinction retrieval	Aerosol extinction	Aerosol scattering	
		Aerosol absorption	
CCN retrieval	Aerosol backscatter	CCN	Steve Ghan
	Aerosol scattering		
	Relative humidity		
	Surface CCN		
	humidification function		
MMCR retrievals	LWC, IWC	LWC	
		TWC	
MWR retrievals	LWP, LWC	LWC	
AERI retrievals	Droplet and crystal optical depth, LWP, IWP, droplet and crystal effective radius	TWC	
		LWP	
		Cloud particle size distribution	
		Cloud extinction	
ASD retrievals	Cloud optical depth, cloud water path, effective radius	Same as for AERI	

Questions?