ARM Cloud Radar Group

Kevin Widener

ARM Cloud Properties/Aerosol Working Group Meeting

November 11, 2008

Radar Group Purpose

- Quality
  - What is good?
  - Do we need to make it better?
- Quantify
  - How good are current and past measurements?
  - How good are our calibrations?
- Improvement
  - What is state-of-the-art?
  - How/when do we get there?

Instruments

- MMCR
- WACR
- SWACR
- RWP

Coming Soon - SWACR!

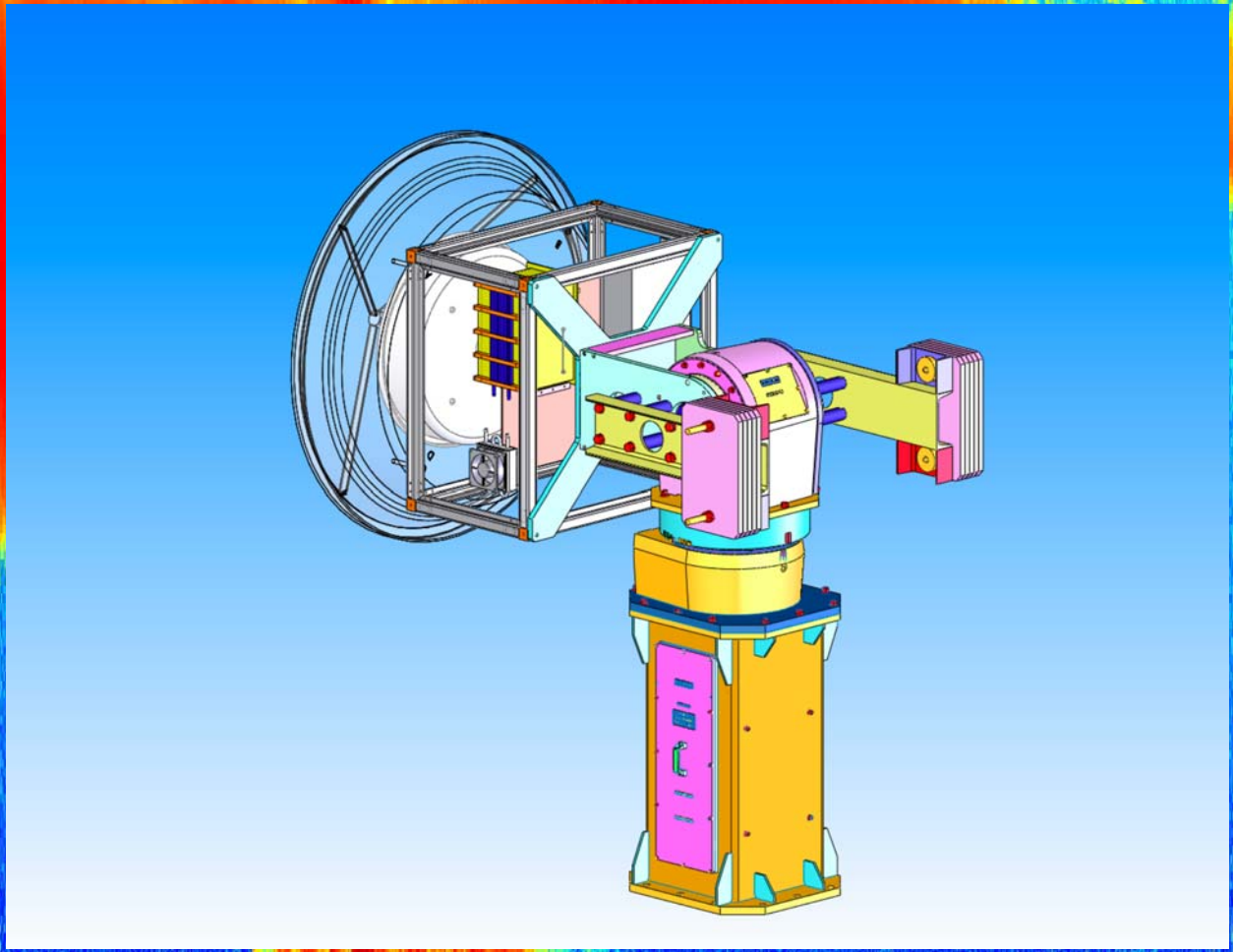

Who can join?

- Science Team Members
- Infrastructure Members
  - Instrument Mentors
  - Developers (ingest and VAP)
- Manufacturers/Vendors
- Basically – anyone that wants to contribute!

Radar Group Members

- Kevin Widener
- Eugene Clothiaux
- Pavlos Kollias
- Jay Mace
- Karen Johnson
- Ken Moran
- Jim Mead
- Ed Luke
- Hans Verlinde
- Jimmy Voyles
- Matt Shupe
- Annette Koontz
- Brad Orr
- Sean Moore
- Ken Kehoe
- Jim Mather
- Viriendra Ghate
- Rich Coulter
- Peter May
- Alain Protat

Radar Group Wiki

- http://wiki.arm.gov
- A place for:
  - Passing on information
  - Sharing thoughts, data, analysis, etc.
  - A repository for calibration data, meeting minutes, presentations, etc.
- Password protected to Radar Group members
- Let me know if you would like to be added!

Radar Group ‘Hot’ Issues

- Problems
- Calibration
- Reliability/Quality
- 3D Clouds
- Future

Problems

- Spectra issues – pulling small returns out in the spectral vicinity of large returns
- Precipitation mode
  - Designed to switch off one of two RF switches to prevent the receiver from saturating.
  - Appears both RF switches are turned off during precip mode giving double the attenuation.
- Reflectivity shifted high at Manus and Barrow.

Radar Calibration Methods

- Direct and absolute calibration with a known size reflector centered on the antenna beam (e.g. SGP WACR with splash plate).
- Indirect calibration uses another measurement (e.g. another radar, disdrometer) to infer calibration.
- Relative calibration by injecting a signal at the antenna.
- Inter-comparison between similar instruments (e.g. WACR and MMCR).

“Almost” Absolute Calibration

- Current method on MMCR and WACR
- Inject a signal (noise source) after the circulator
- Misses antenna, feed, waveguide, and circulator

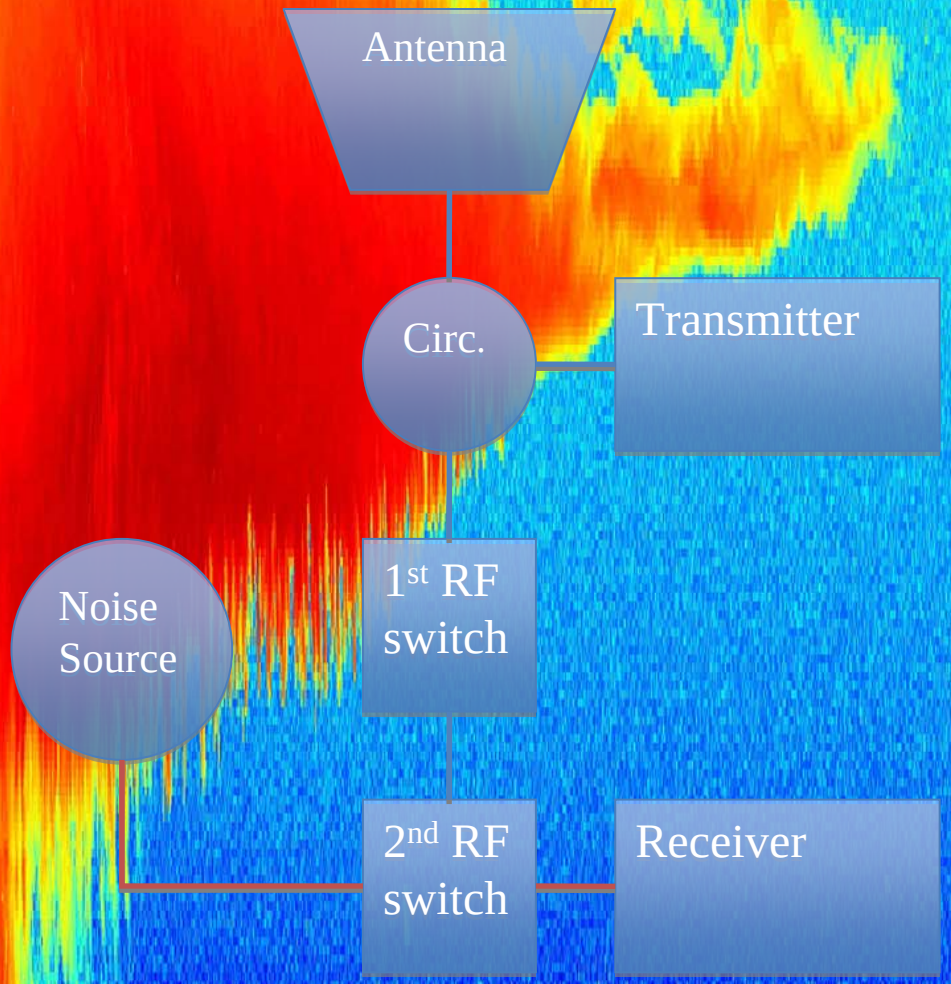

Reliability/Quality

- ARM has made significant investments in spare parts for major MMCR components.
  - Prepositioned in TWP for more timely repairs
- DQ Office is routinely reviewing data.
- Long term statistics on radar data

Barrow & Eureka MMCR Comparison

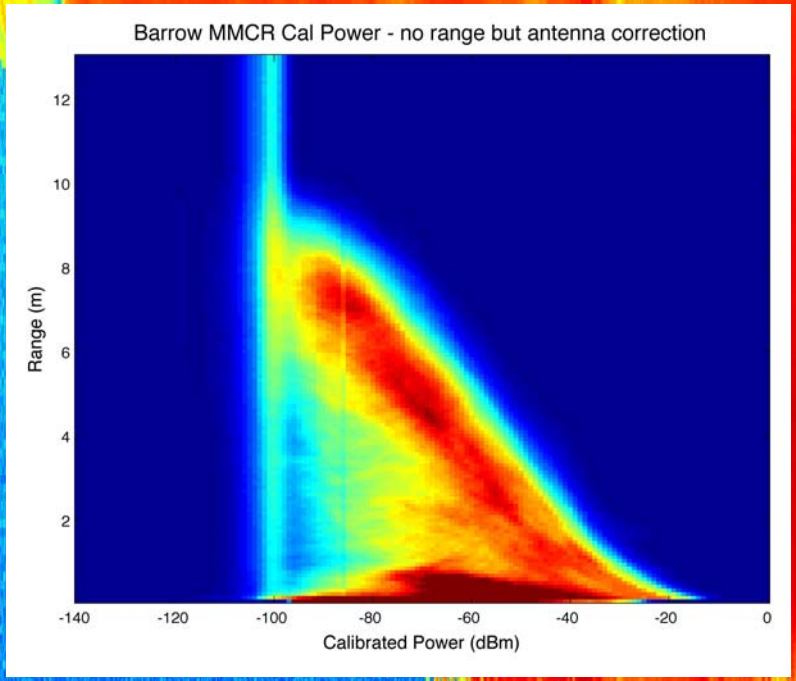

2/2008 – 10/2008

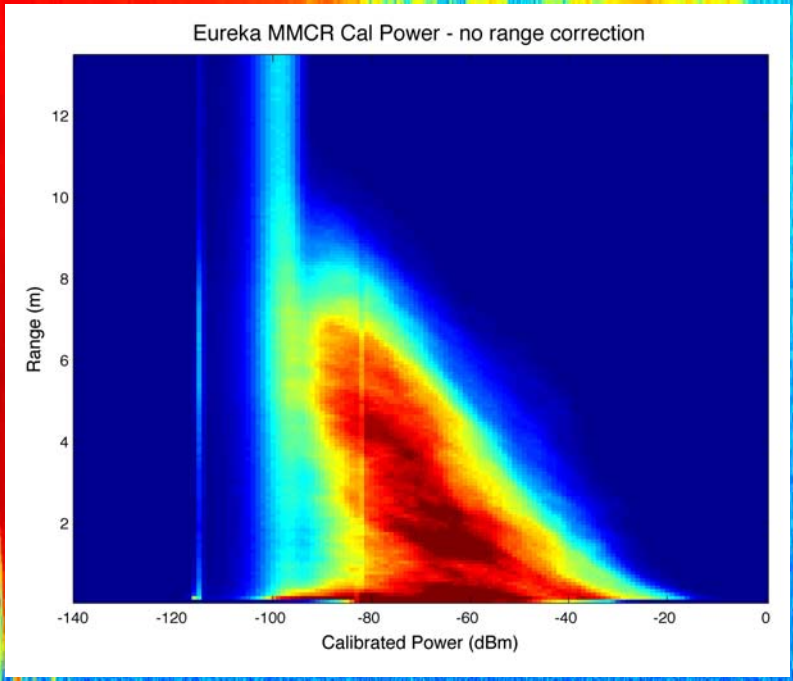

10/2007 – 10/2008

3D Clouds - SWACR

- SGP WACR to be repackaged and mounted on an Orbit EL/AZ positioner.
- Due at SGP in March 2009 for initial testing.
- Scanning strategy being worked on by Pavlos Kollias.
- After SGP tests, off to the Azores in the summer!
- Then it becomes the AMF-2 cloud radar.

Future

- Antenna replacement
  - New antennas currently being built
  - We'll see a big increase in cross-pol isolation at SGP fro ~13 dB to 27 dB
- Processor upgrades
  - Not IF but WHEN
  - Requirements/Improvements
- What we don't know…

Ken Moran is Retiring!

- Lead engineer and primary force behind the MMCR
- Leaving NOAA but will be available (as long as it doesn’t interfere with with his fly-fishing!)

Breakout Agenda

- Radar Diagnostics Update – ARM DQ Office
- SWACR Update/Discussions
- Excessive Reflectivity at Manus and Barrow
- Spectra Issues
- CloudSat, MMCR, WACR comparisons
- MMCR Precip Mode Problems
- ARSCL Update