INFLAME

In-situ Net FLux within the AtMosphere of the Earth

Martin G. Mlynczak
David G. Johnson
And
The INFLAME Team

NASA Langley Research Center

INFLAME Team @ Langley

- Marty Mlynczak, SD, PI
- David G Johnson, SED, TL
- Ed Kist, SED, PM
- Charles Boyer, SED, Mechanical
- Timothy Shekoski, AMA, Mechanical
- Chuck Antill, SED, Electrical
- Dave Kratz, SD, Science
- Don Robinson, SSAI, Optical

Acknowledgements

- NASA Earth-Sun System Technology Office
  - Instrument Incubator Program
- NASA Langley Science Directorate
- NASA Langley Systems Engineering Directorate

INFLAME - Outline

- **Measuring Net Fluxes & Atmospheric Heating Rates:**
  - Historical perspective and continuing challenges
- **INFLAME**
  - Vision
  - Concept
  - Design
- **Current Status**

Some Challenges to Measuring Net Fluxes

- Net flux is a differential quantity – often differencing large numbers to get small ones – e.g., solar heating near tropopause

- Places stringent requirements on an instrument's accuracy and stability, especially if separate systems are used to measure upwelling and downwelling fluxes

- Electro-optical devices often measure radiance (W m^{-2} sr^{-1}) and *not* flux (W m^{-2})
  - Requires a (wavelength and scene dependent) radiance-to-flux conversion to determine flux, prior to computing net flux

- Time elapsed during measurement – atmosphere changes!

Net Flux Measurement – At the Beginning

The Suomi "Economical Net Flux Radiometer"

Circa 1960

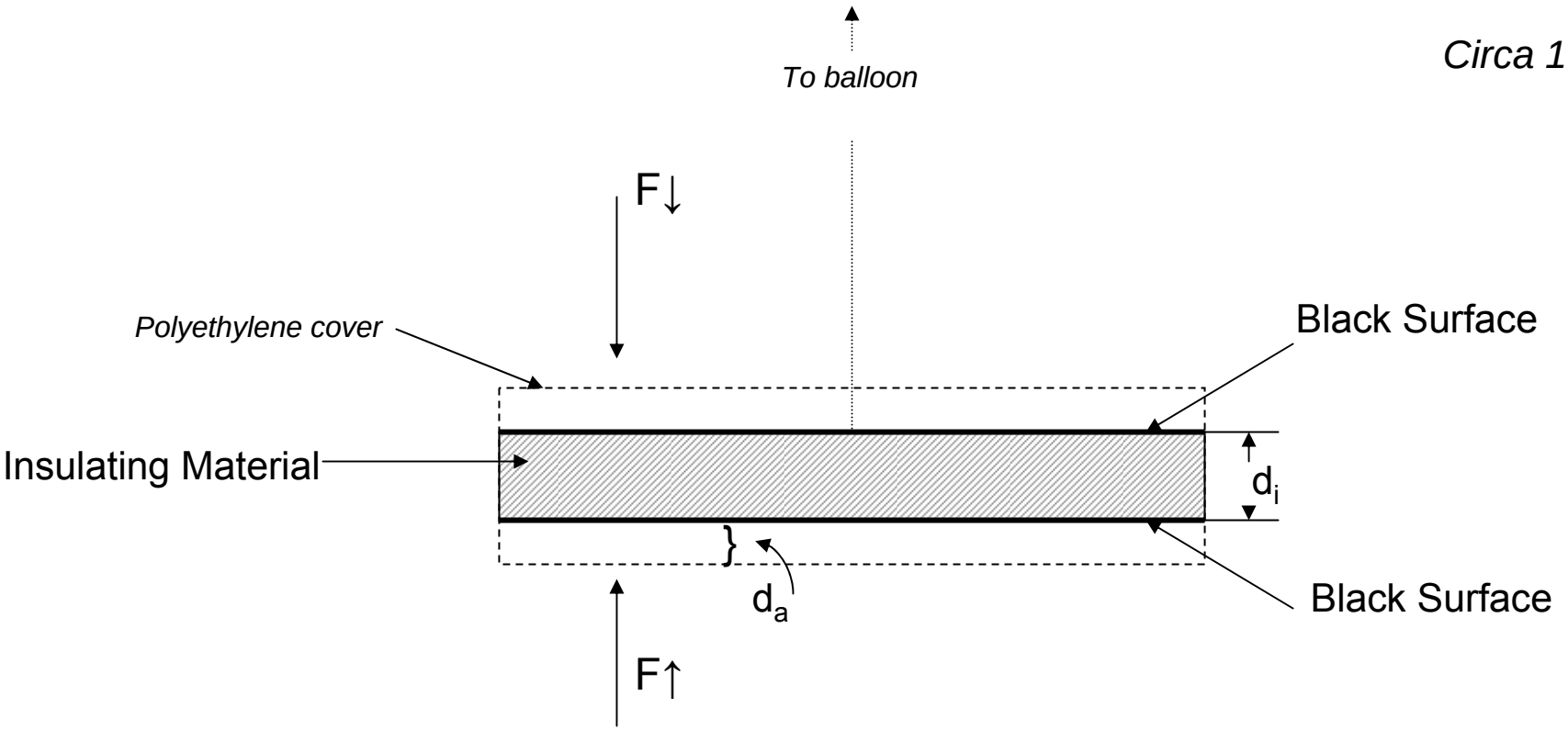

$$\frac{\partial T}{\partial t} = f(T_b, T_t, T_a, r, a, d_i, d_a, k_i, k_a)$$

The INFLAME Vision

"An Economical Net Flux Interferometer"

- Develop an instrument to directly measure the difference between the upwelling and downwelling radiation fields
- Measure the flux and not the radiance
- Maximize use of common optical paths within instrument to minimize sensitivity to different errors, drifts, etc.
- One instrument for visible and one for infrared
- Readily mounted on common aircraft for easy deployment almost anywhere
- Small enough, and low cost, to ultimately enable several to be deployed at once to address issues of cloud noise, inhomogeneous nature of aerosol layers, etc.

The INFLAME Concept

"An Economical Net Flux Interferometer"

- Use low-resolution Fourier transform spectrometer to measure *directly* the difference between upwelling and downwelling radiation
- Winston cones "in reverse" at optical inputs gather the flux
- Develop two separate FTS systems, one for infrared radiation, one for visible radiation
- Mount in empty (modified) Lear-Jet wing fuel pod
- Cycle up and down in altitude recording vertical profile of net flux
- Derivative of net flux w/r/t altitude is the atmospheric heating rate due to radiation
- Can be deployed to almost anywhere

INFLAME – Measurement Requirements

- Measure separately the net flux of the UV/Visible and the Infrared streams of radiation:
  - 3 – 100 μm for Infrared
  - 0.3 to 3 μm for Visible
- Instrument must be capable of working nearly autonomously from an aircraft
- Heating rate at a given altitude determined to within +/- 10% accuracy
- Moderate spectral resolution ~ 75 cm^{-1}
- Measure net flux within the atmosphere from the surface to the midlatitude tropopause (~ 12 km)

Measuring Net Flux Divergence

- **From an airborne platform:**
  - **Measure Net Flux at Z_1**
  - **Measure Net Flux at Z_2**
- **Approximate Heating Rate by:**

$$\frac{\partial T}{\partial t} = \frac{1}{\rho C_p} \frac{F_{net}(z_2) - F_{net}(z_1)}{(z_2 - z_1)}$$

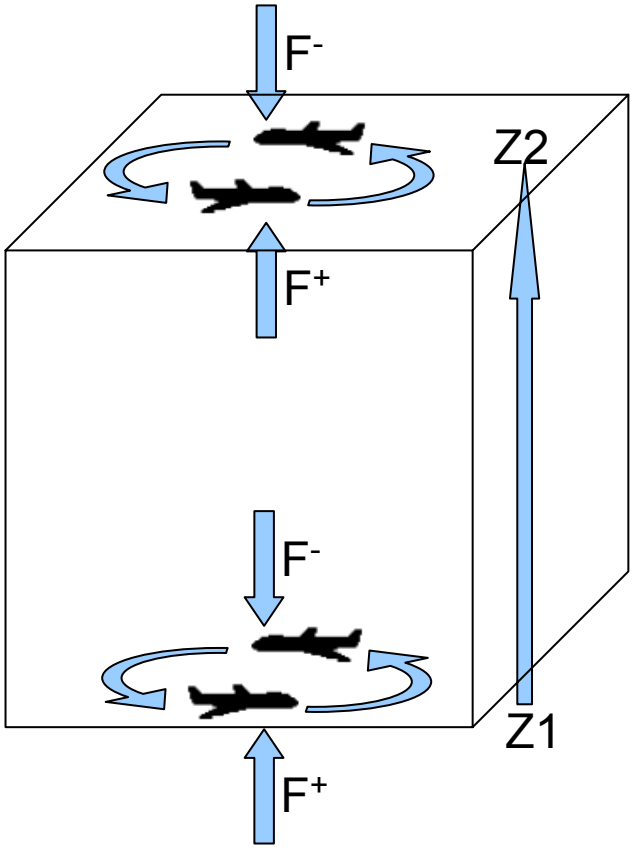

Net Fluxes and Net Flux Divergences are the most difficult of all Atmospheric radiation measurements.

INFLAME – The Concept

- Collect upwelling and downwelling radiation through downlooking and uplooking ports on an aircraft platform
- Direct radiation from ports to the two inputs of a 4-port Fourier transform spectrometer
- Scan FTS and record outputs from detectors at the two output ports to produce complimentary interferograms
- Inverse Fourier transform of the interferograms gives the spectrum of the net flux (F↑ - F↓)

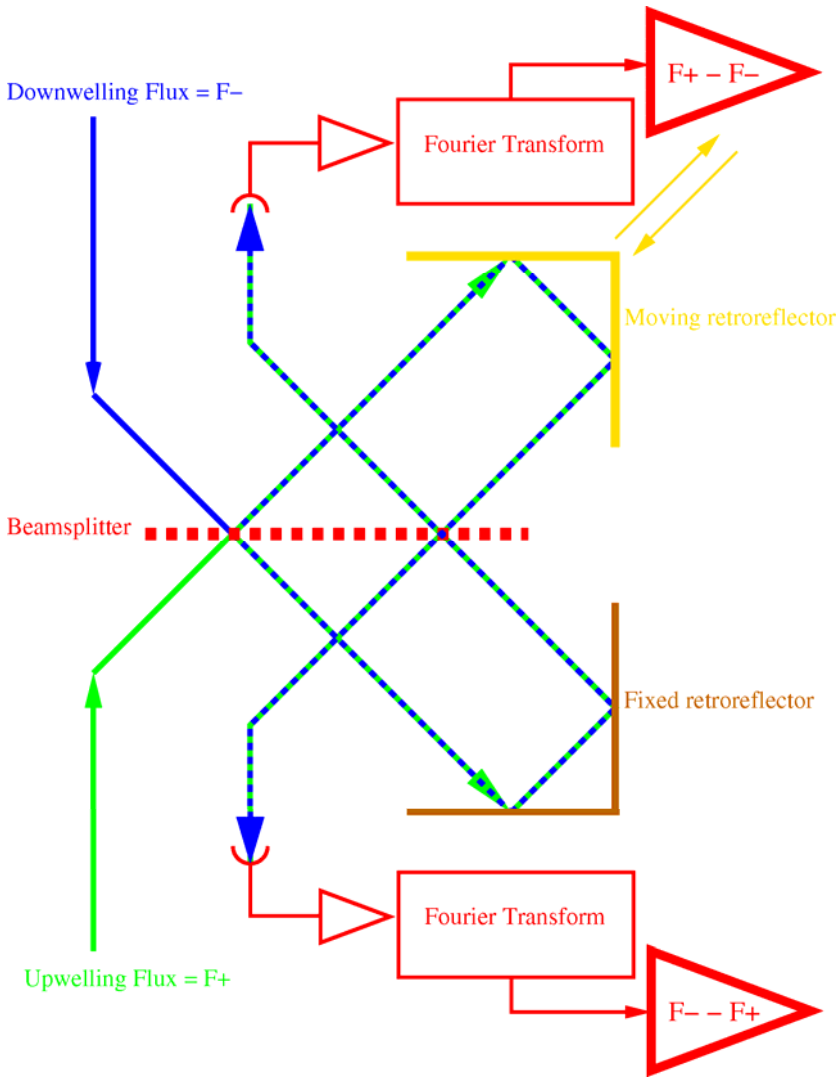

INFLAME – Collecting the Flux

Input Radiation from Atmosphere
2π Steradian

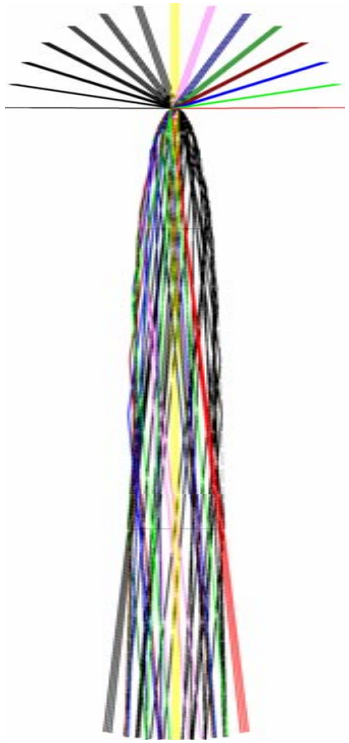

Input to FTS

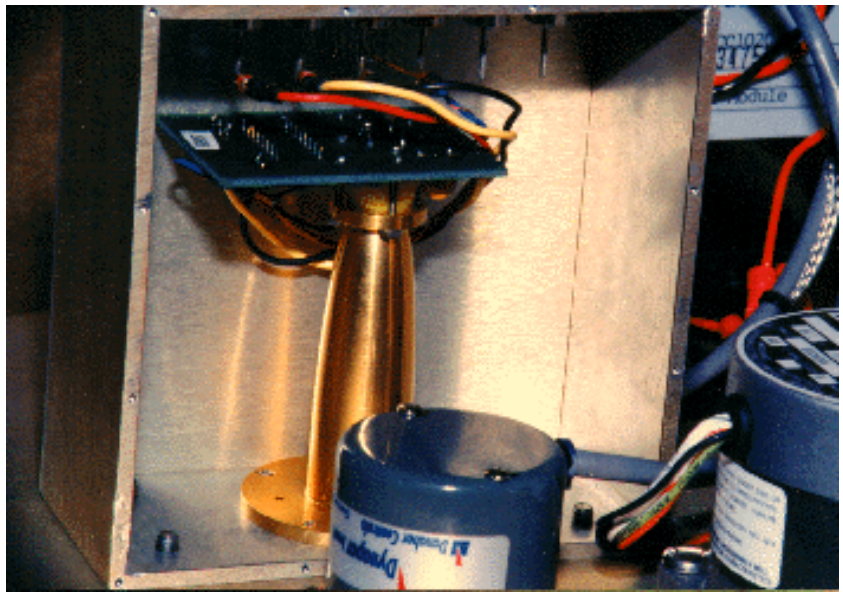

Winston cone “used In reverse” collimates hemisphere of atmospheric radiation for input to FTS

INFLAME

Winston Cone Angular Response

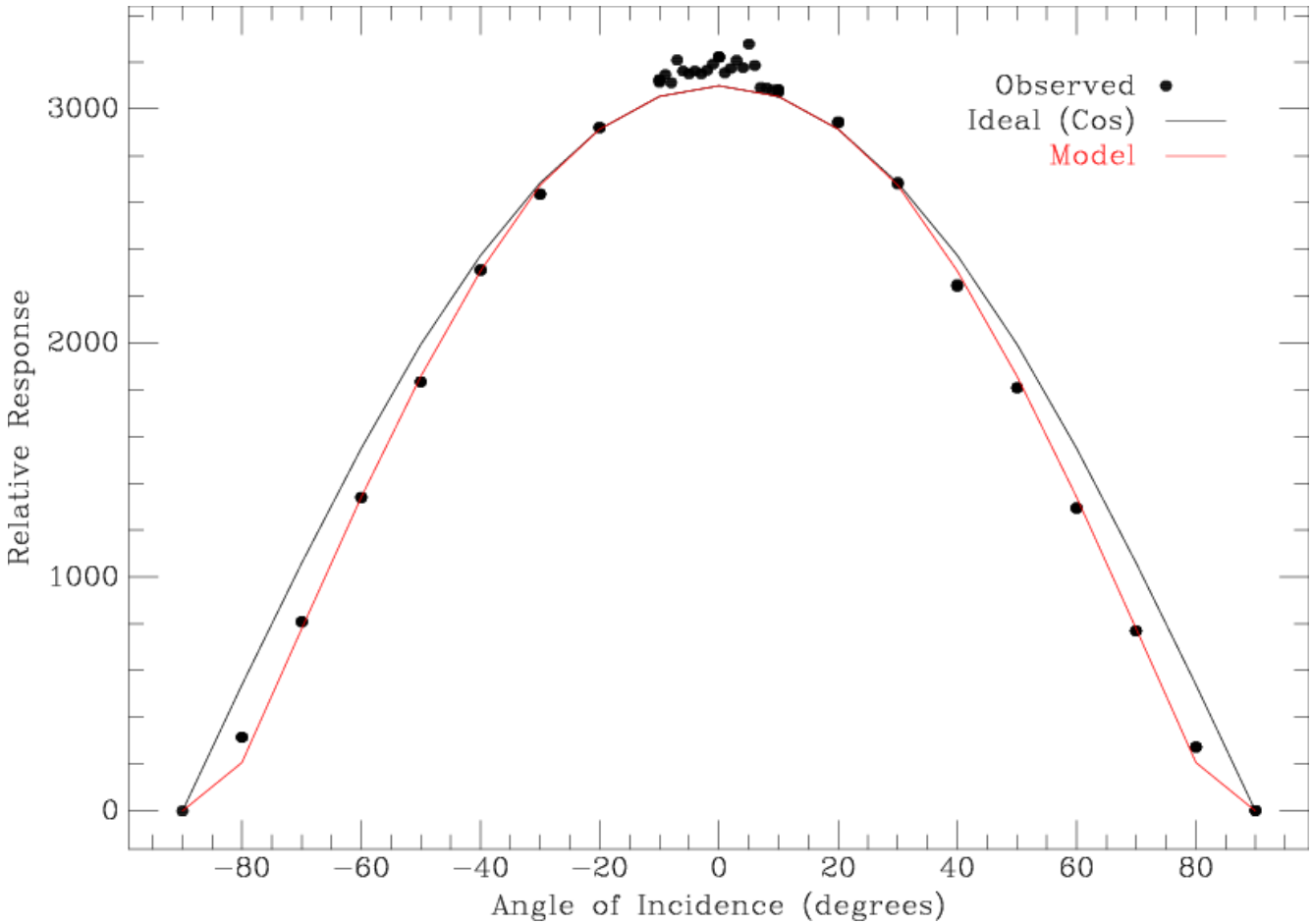

INFLAME - Optical Design Approach

- Use all-mirror design (except FTS beamsplitter) to achieve desired performance over wide wavelength range
- Use off-axis design to eliminate background from central obscuration
- Maximize symmetry so that instrument offsets cancel in the FTS
  - Use Offner relays for 1:1 imaging and nearly diffraction-limited imaging performance
- Use same input optics to couple both input cones to the FTS so that emission cancels to first order
  - Results in a total of 3 Offner relays for each FTS
    - A large Offner couples both input cones to the FTS
    - Separate Offner relays couple each FTS output to the detectors

INFLAME Optics Layout

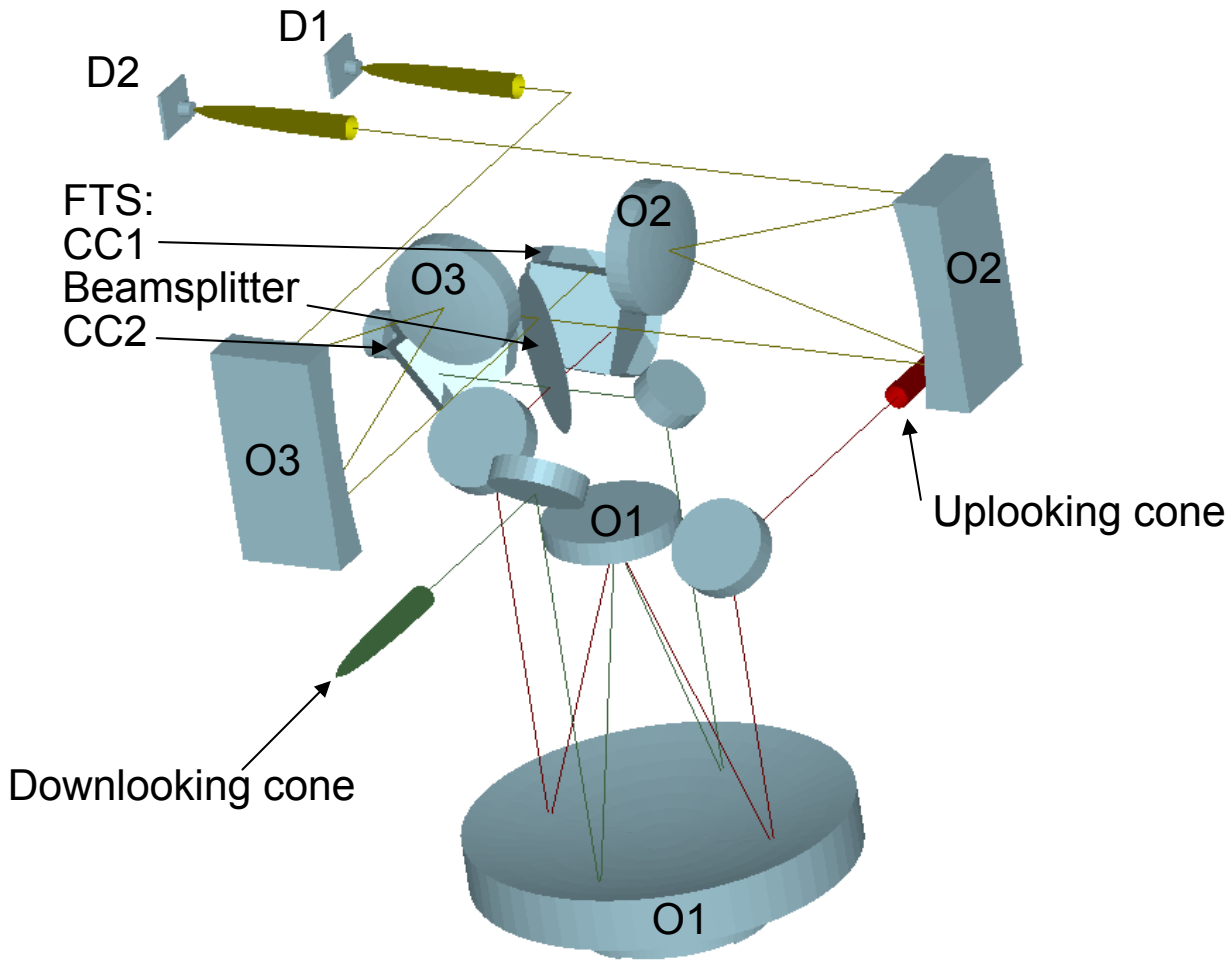

Baseline FTS Parameters

- **Design: 4-port FTS with cube corner retroreflectors, 45º beamsplitter**

- **Scan distance: 75 µm (37.5 µm each side)**
  - Provides spectral resolution of 67 cm^{-1}
  - Driver is need to resolve variations in FTS responsivity

- **Scan time: 1s**

- **Beam divergence in FTS: f/6.5, telecentric design**

- **Nominal throughput: 0.025 cm^2 sr**

- **Science data rate for 2 LW and 2x2 SW detectors:**
  - 5940 bytes per second for 16-bit data words, or 21.4 MB per hour.

INFLAME Instrument Isometric Views

Input Port (Downwelling)

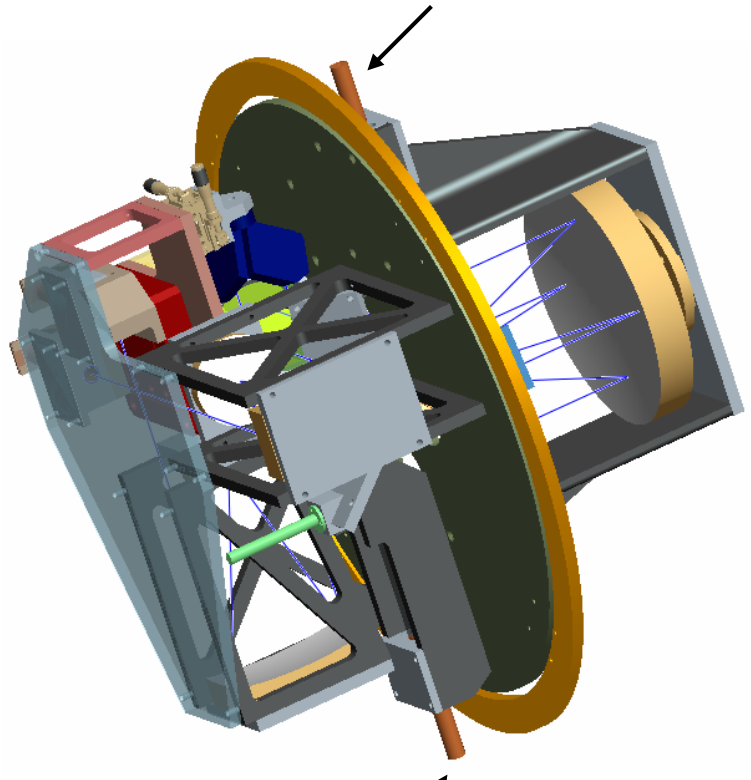

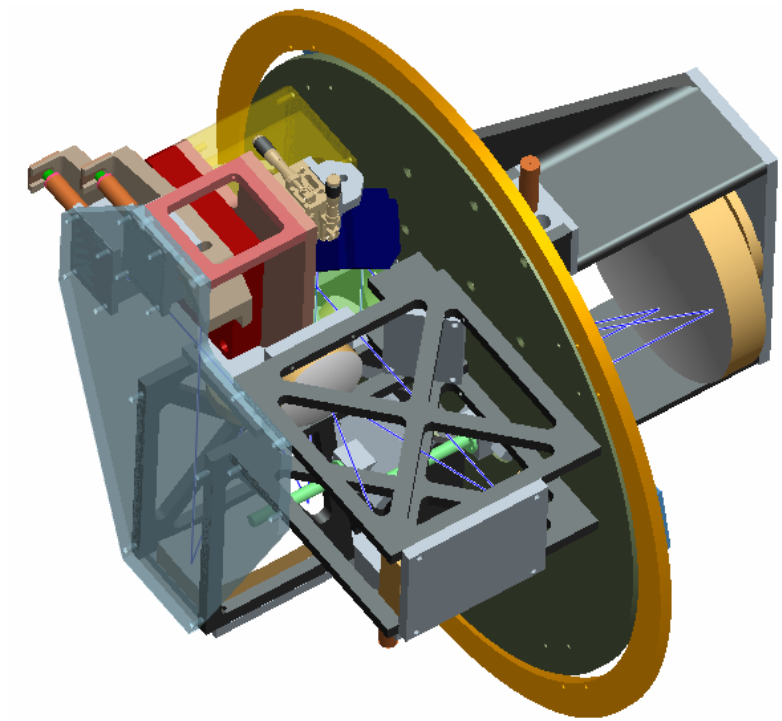

Input Port (Upwelling)

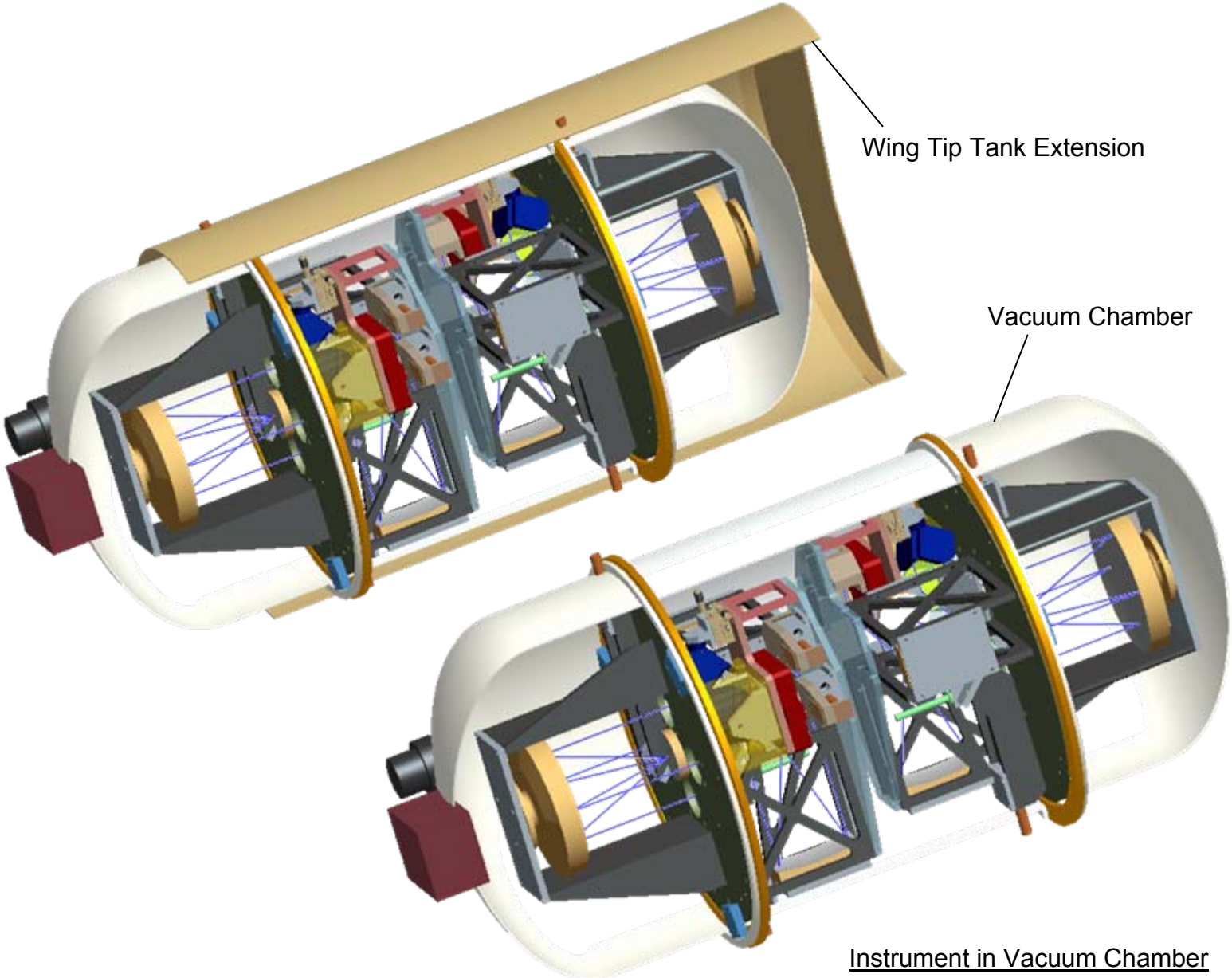

Instrument in Vacuum Chamber

INFLAME Lear Jet Aircraft Platform

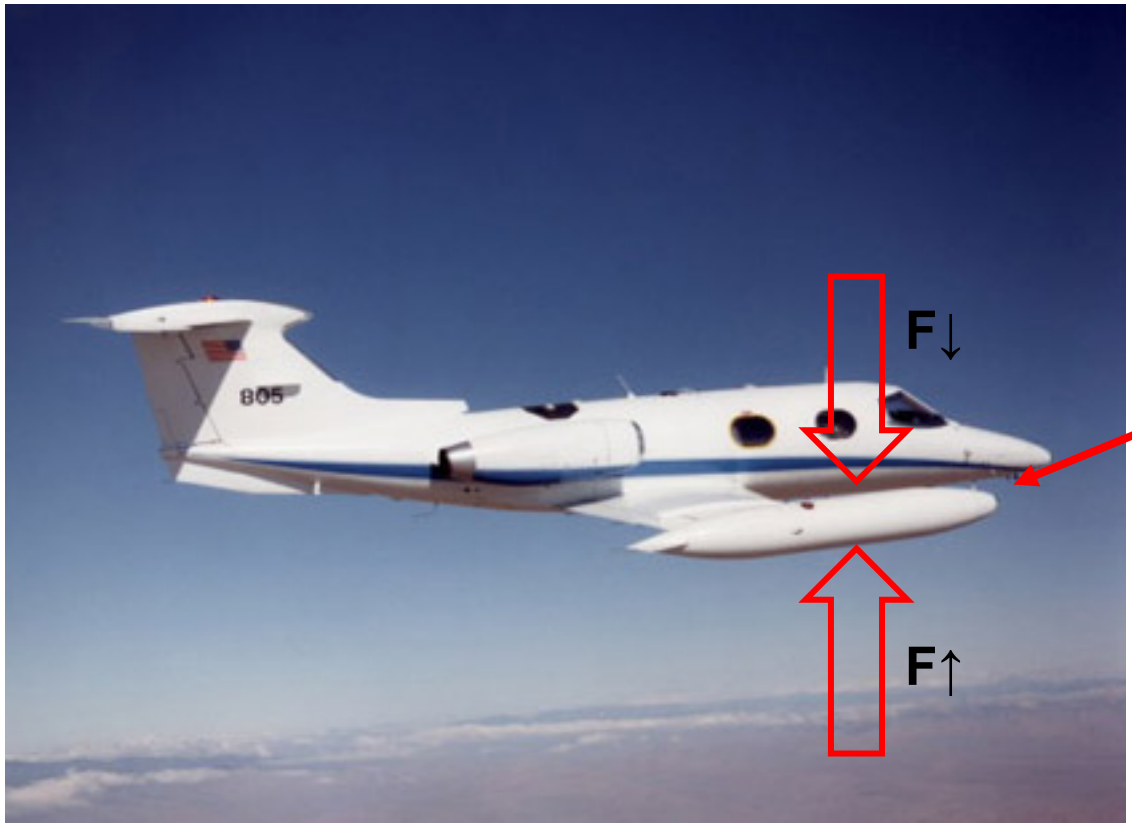

INFLAME mounted In wing fuel pod

INFLAME Mounting in Lear Jet Fuel Pod

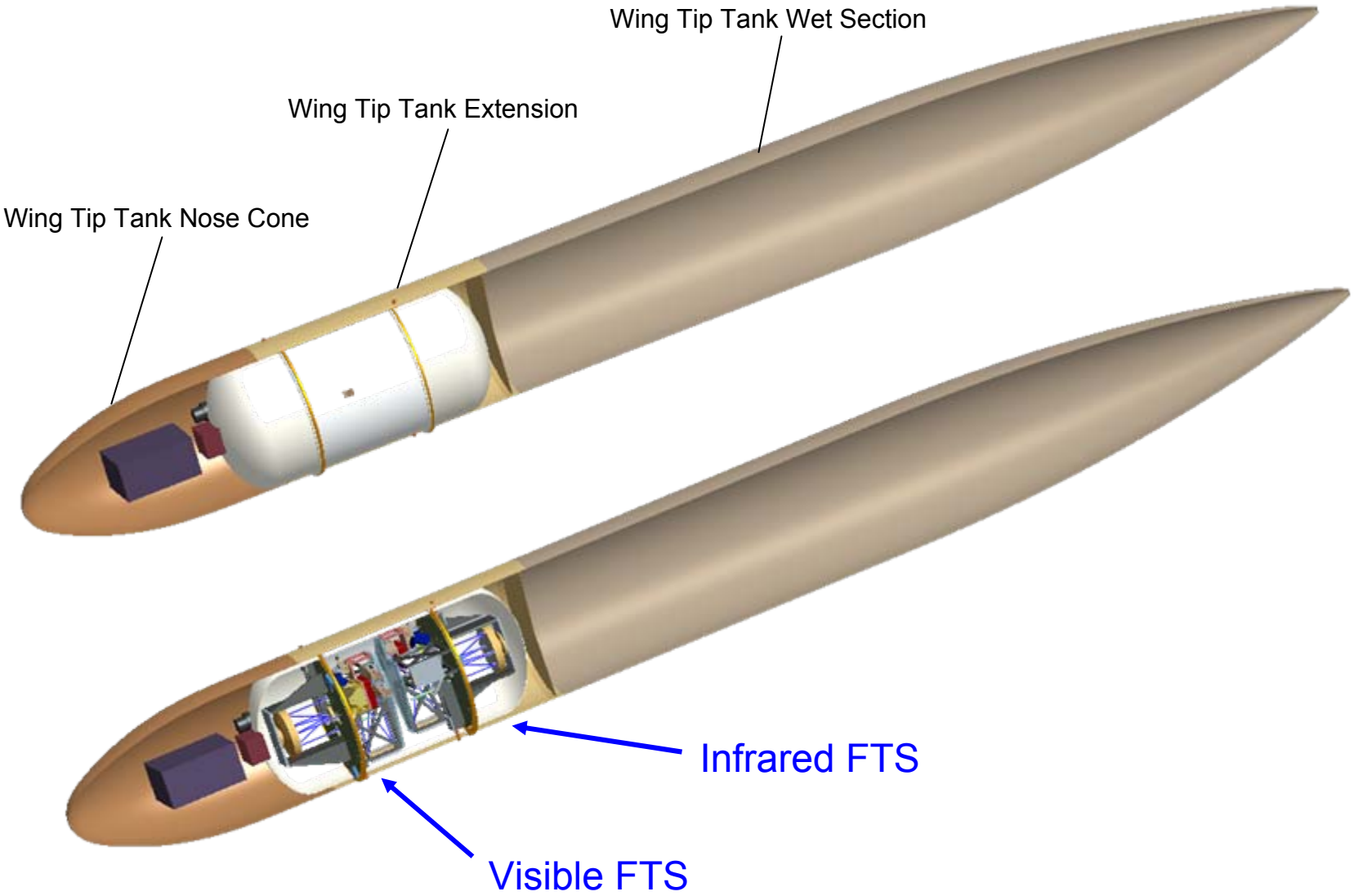

INFLAME Mounting in Lear Jet Fuel Pod

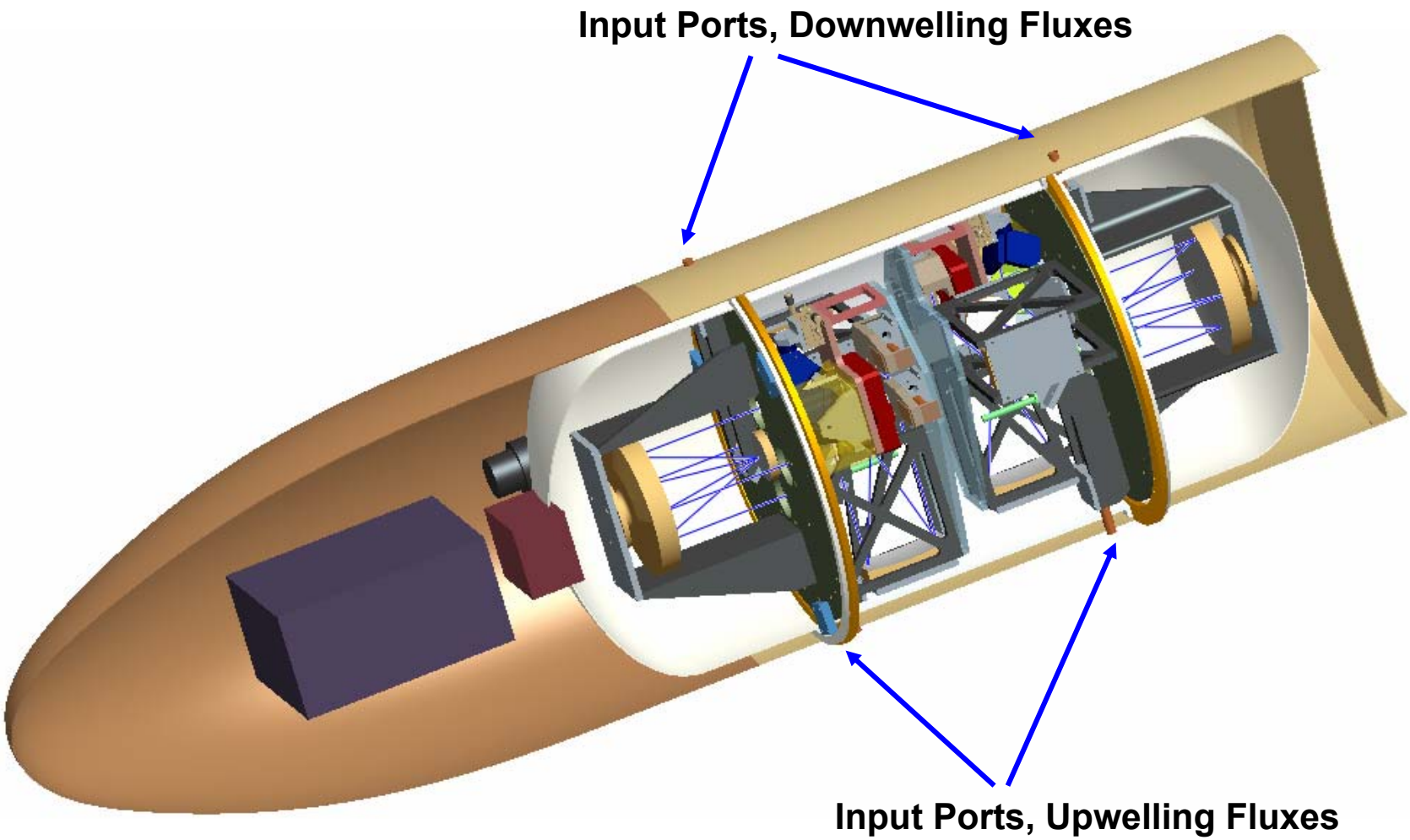

INFLAME – Vital Statistics – 11/2006

- Mass – ~80 kg (both sensors)
  - Includes mass of vacuum housing
- Power
  - Maximum (peak) 250 W – keeps heaters running
- Data Rate
  - 14 Kbps
- Optical Path Difference
  - 75 μm (may be 300 μm; depends on mirror translation stage trade)
  - Allows mirror translation with accurate piezoelectric drive
- Spectral Resolution
  - 67 cm^{-1} – may be able to increase to ~ 20 cm^{-1}
- Volume
  - Approximately 22 inch diameter; 40 inch length

INFLAME - Summary

- INFLAME addresses the most difficult problem in atmospheric radiation – the measurement of heating and cooling rates within the atmosphere
- Use FTS to directly measure the net flux via optically "chopping" the two beams and determining their difference
- Many of systematic uncertainties cancel out, reducing requirements on absolute accuracies
- INFLAME will be aircraft-borne, ideal for studying effects of pollution and aerosols on radiation, providing fundamental verification of radiative transfer codes for climate models
- Lear Jet – "go anywhere, anytime"
- Successfully passed PDR and NASA Annual review 11/22/2006
- Anticipate demonstration flight of INFLAME in mid-2008
- Validation flight out of Langley, Clear Sky, over COVE site

Backup Material

Collecting Flux: Input Optic

- **Must collect light over a full hemisphere to measure flux.**
- **Use a non-imaging Winston cone to collect radiation and collimate it into an f/6.5 beam.**
  - Input aperture is 1mm diameter.
  - Output aperture is 13 mm diameter.
  - Average number of reflections over all angles of incidence is 1.4, with a maximum of 5.
  - If both input cones are maintained at the same temperature the thermal emission will cancel in the FTS.

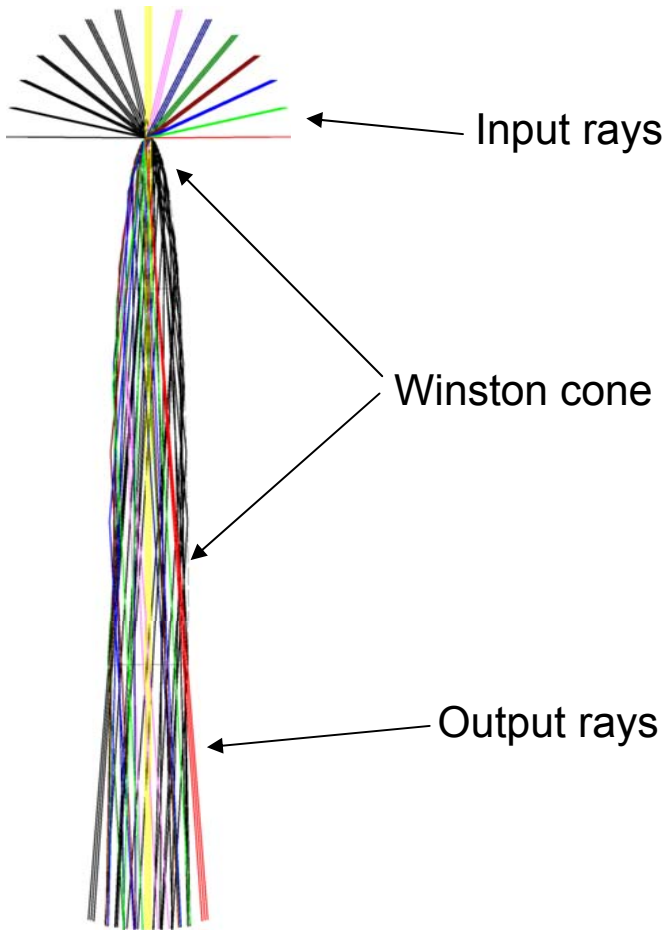

Atmospheric Heating and Cooling Rates

$$\frac{\partial T}{\partial t} = \frac{1}{\rho C_p} \frac{\partial F_{net}(z)}{\partial z}$$

$$F_{net}(z) = F\uparrow(z) - F\downarrow(z)$$

$$F\uparrow(z) = \int_0^1 I(z)\,\mu\, d\Omega$$

$$F\downarrow(z) = \int_{-1}^0 I(z)\,\mu\, d\Omega$$

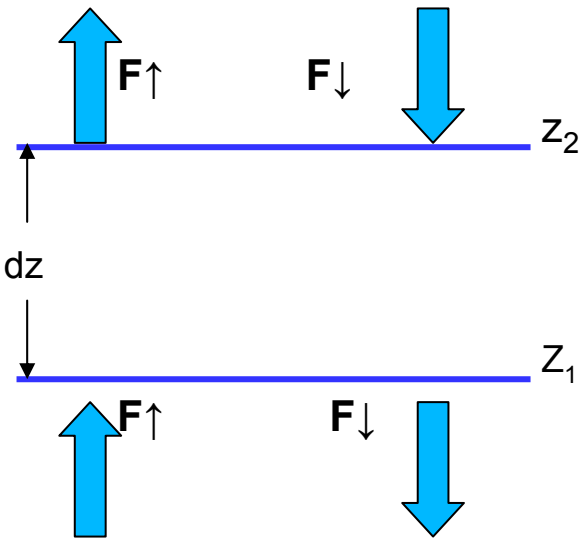

Require an instrument capable of *directly* measuring the net flux

INFLAME – Fundamental Aspects

Every atmospheric model has essentially 3 equations:

- Momentum: (F = ma)
- Continuity: (Conservation of mass)
- Energy: (First Law of Thermodynamics)

Energy equation requires knowledge of rate at which atmosphere heats and cools:

- Radiation
- Latent process (water condensation/evaporation)
- Conduction

INFLAME measures the rates of heating & cooling of the atmosphere by visible and infrared radiation

INFLAME's Contribution to Atmospheric Radiation Measurement

Top of Atmosphere Fluxes – Solar and IR – Measured by Satellites

INFLAME

Within The Atmosphere

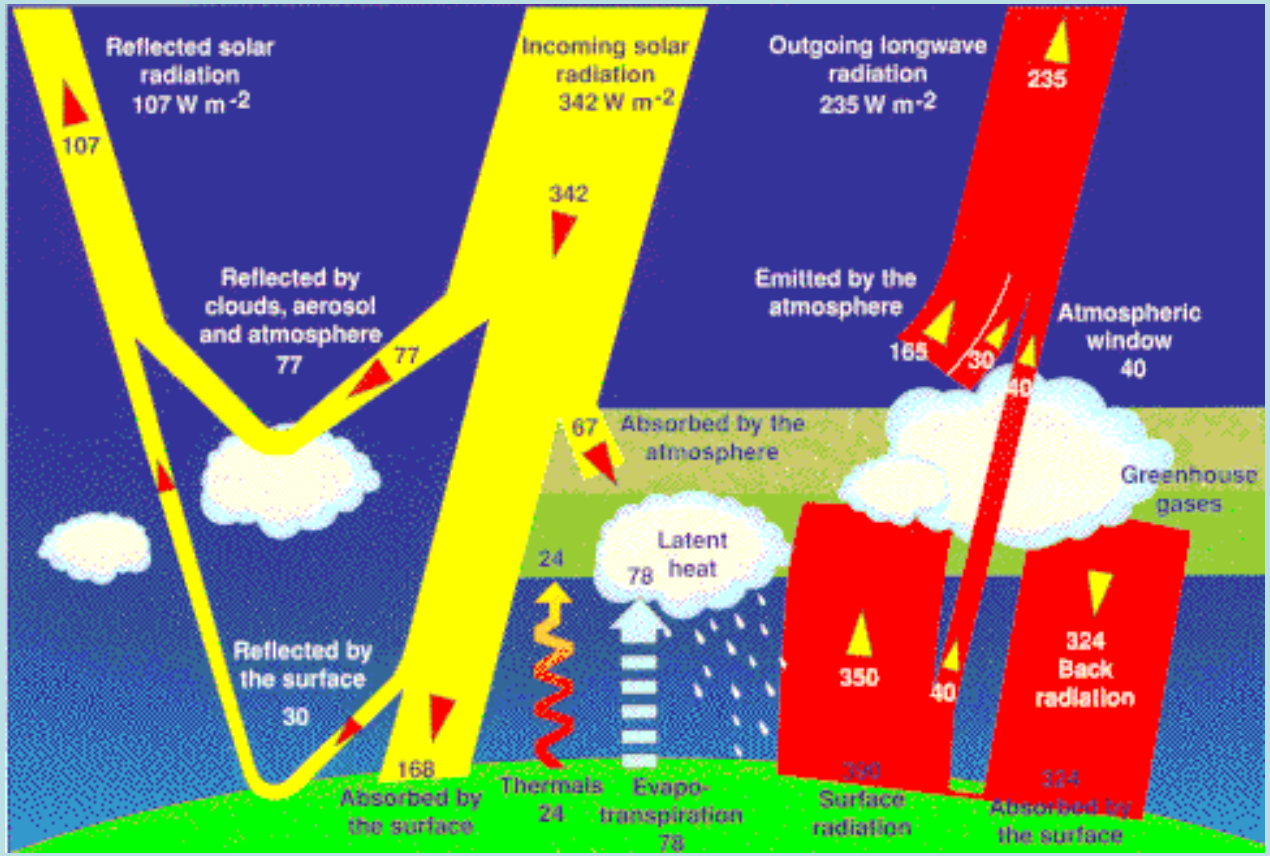

Solar and IR Fluxes: Measured at Surface

Science Measurement Requirements

- **Measure net flux within the atmosphere from the surface to the midlatitude tropopause (~ 12 km).**
  - Use an airborne platform that provides nearly unobstructed views upward and downward than can travel repeatedly between the surface and the tropopause.
  - Measuring flux requires collecting radiation over a complete hemisphere.
- **Estimate radiative heating rates in 1km layers of the troposphere with an accuracy of 10% at 5 km**
  - Total wavelength coverage required to make this measurement is 0.3 μm to 100 μm.
    - **Use IR FTS (LW) for 3-100 μm.**
    - **Use UV-NIR FTS (SW) for 0.3-3μm.**
    - **In reality the wavelength ranges for the IR and the UV-NIR FTS will overlap, and crossover wavelength will be determined by trading LW cutoff of the UV-NIR beamsplitter against the SW cutoff of the IR beamsplitter.**
- **The key to success is to design an instrument with response stable to better than 0.2%**
  - Requires knowledge of attitude wrt sun within 0.3 degrees

INFLAME

Contemporary Approaches to Net Flux Measurement

- Involve radiometric measurements from aircraft
  - Measure upwelling and downwelling streams of radiation
  - Sometimes with two separate instruments
  - Difference the two measurements to obtain net

- Drawbacks
  - Requires high absolute calibration
    - Few percent uncertainty in calibration results means error in net flux is larger than net flux itself
  - Often *radiance* and not *flux* measured
    - Requires scene-dependent and wavelength-dependent radiance to flux conversion

Detector (Shortwave)

Requirements:

- Spectral Range: 0.3 μm to 3 μm
- Noise: 44 μW/m^2·cm^{-1}
- Modulation Freq: 500 Hz at 0.3μm, 50 Hz at 3μm
- Sample at 1.5 KHz (150% Nyquist rate)

Detector Candidate: EOS UVS/PBSE-025/020 Two-color

(Silicon & Lead Selenide) photodetector

Parameter	Top Detector	Bottom Detector
Type	UV Si Photodiode	PbSe Photoconducto
Active Diameter	2.5mm	2.0 x 2.0 mm
Spectral Range	0.2 to 1.0 μm	1.0 to 4.5 μm
Responsivity	0.5 A/W @ 850nm	>2000 V/W @ 4.2μm
NEP (W/Hz$^{1/2}$)	<1.5e-14 @ 850nm	< 7e-11 @ 4.2μm

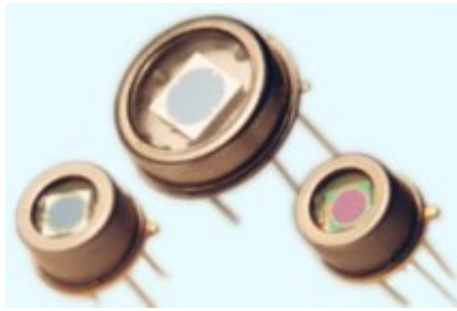

Detector (Longwave)

Requirements:

- Spectral Range: 3 μm to 100 μm
- Noise: 712 μW/m^2·cm^{-1}
- Modulation Freq: 50 Hz at 3μm, 1.5 Hz at 100μm
- Sample at 150 Hz (150% Nyquist rate)

Detector Candidate: Molectron P1-73 Ultra-low Noise Pyroelectric Detector

- Equivalent Noise:
  - 54 μW/m^2·cm^{-1} at 75um scan
  - 216 μW/m^2·cm^{-1} at 300um scan
- Will need to thermally stabilize

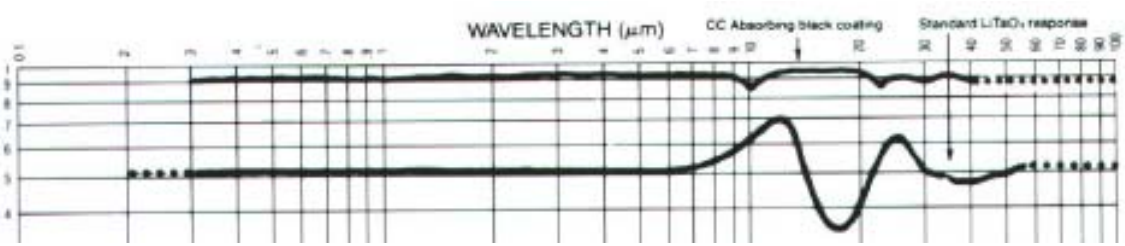

Parameter	Value
Active Diameter	3 mm
Responsivity	.5 μA/W (Detector) 90 V/W (FET output)
NEP	1e-9 W/Hz$^{1/2}$
Detectivity	2.7e8 cm-Hz$^{1/2}$/W
FET freq response	> 100KHz
Temperature Stability	0.2 %/°C
Temperature Range	0 to +70°C

INFLAME – Need for Net Flux Measurements

Factors Influencing Net Fluxes

- Aerosols
- Clouds
- Changing greenhouse gas abundances
- Pollution

All these alter the profile of radiative heating in the atmosphere

Potential exists to alter thermal profile and stability of the atmosphere

Net flux measurements answer directly the question of radiative impacts of aerosols, clouds, etc.,

Validate "indirect" approaches using radiative transfer calculations based on observed optical properties

Various suborbital science workshops point out need for net flux measurements

DoE ARM Program hosting a Net Flux workshop at Scripps January 2007

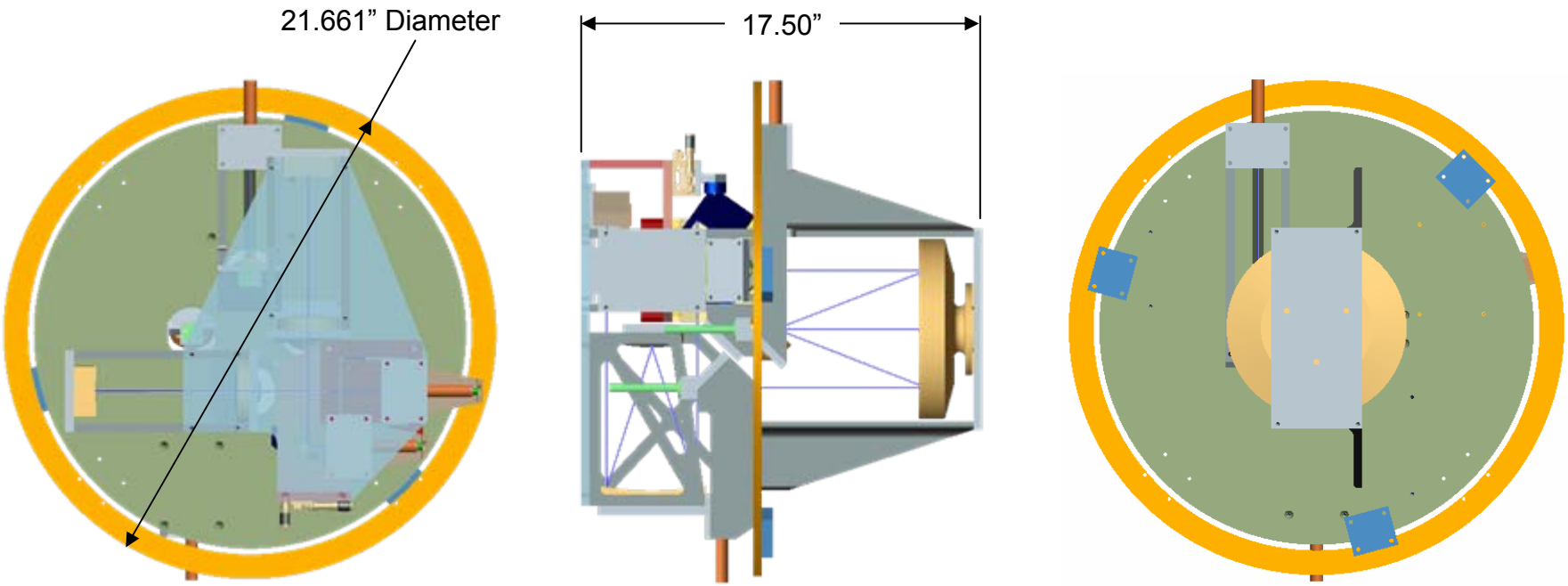

Instrument Views

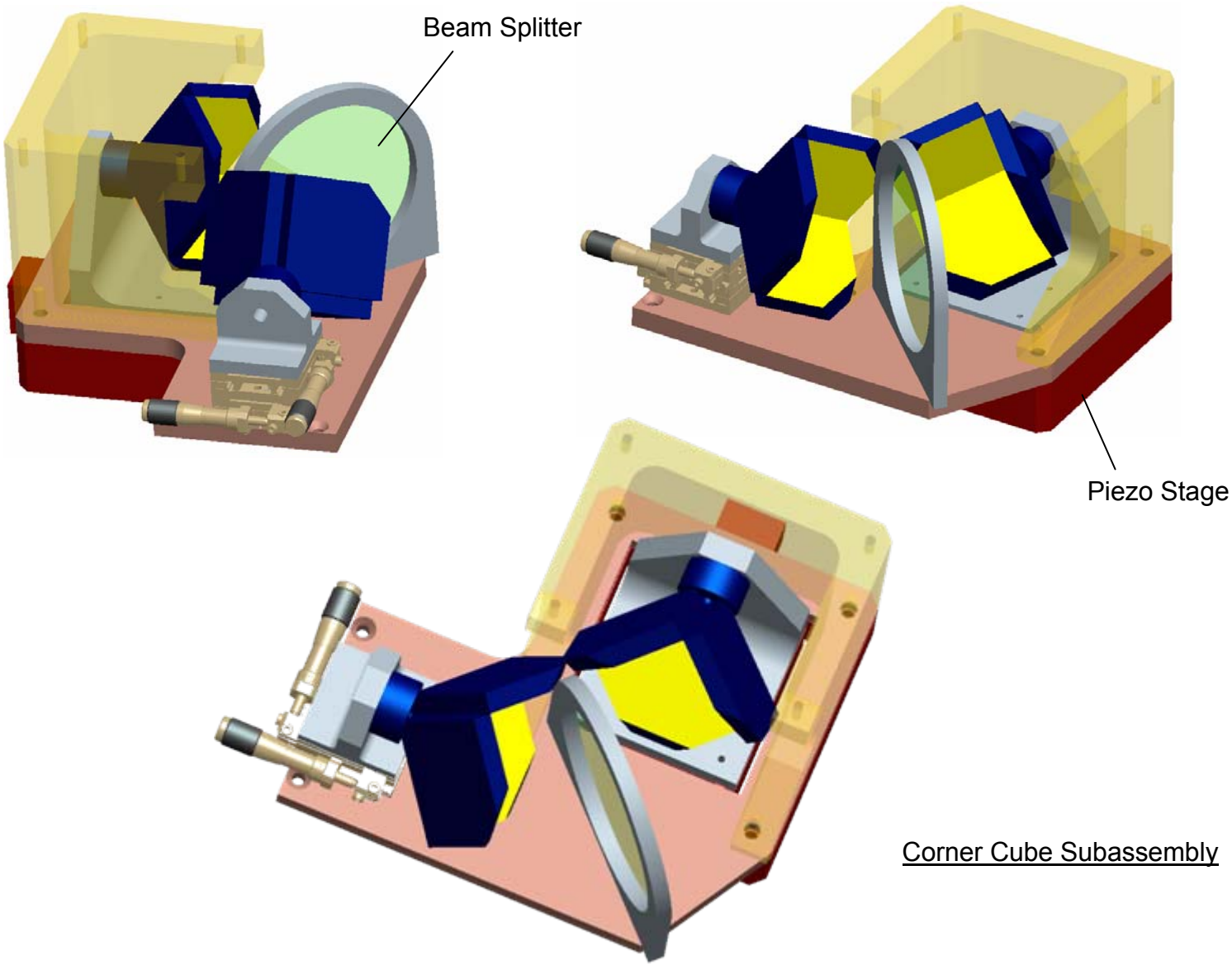

Corner Cube Subassembly

Baseline LW Parameters

- **Beamsplitter: Bilayer Ge/polypropylene thin-film**
- **Gold-coated aluminum optics**
- **Output channels: 2 identical outputs**
- **Calibration sources: Temperature-controlled cavities**
- **LW detectors (100 to 3 μm):**
  - Maximum input power: ~271 μW
  - NESR < 712 $\mu W/m^2\ cm^{-1}$
  - electronic bandpass: 1.5 to 45 Hz
  - sample rate at 1.5 * Nyquist: 135 Hz.
  - NEP < 13 nW/√Hz
  - Dynamic range: > 11 bits

LW Cumulative Flux Plots

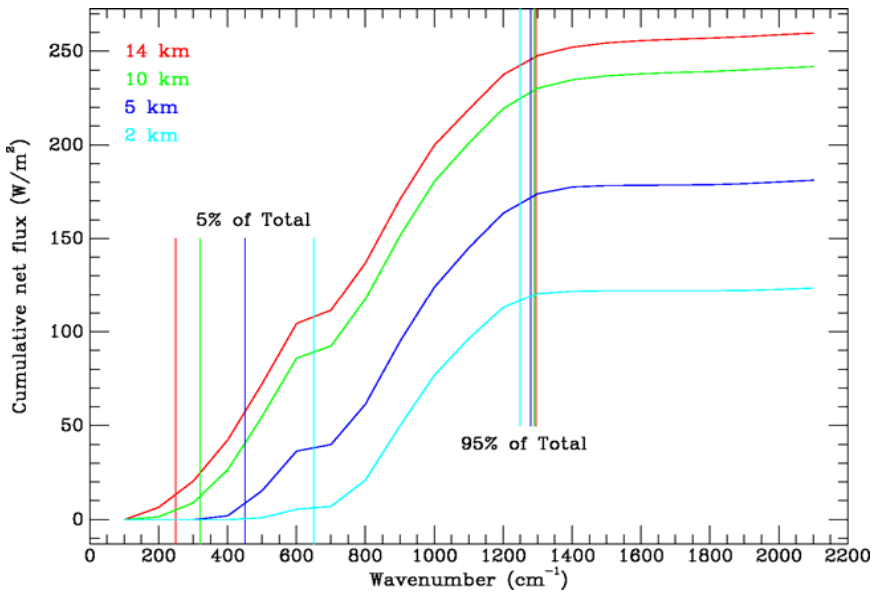

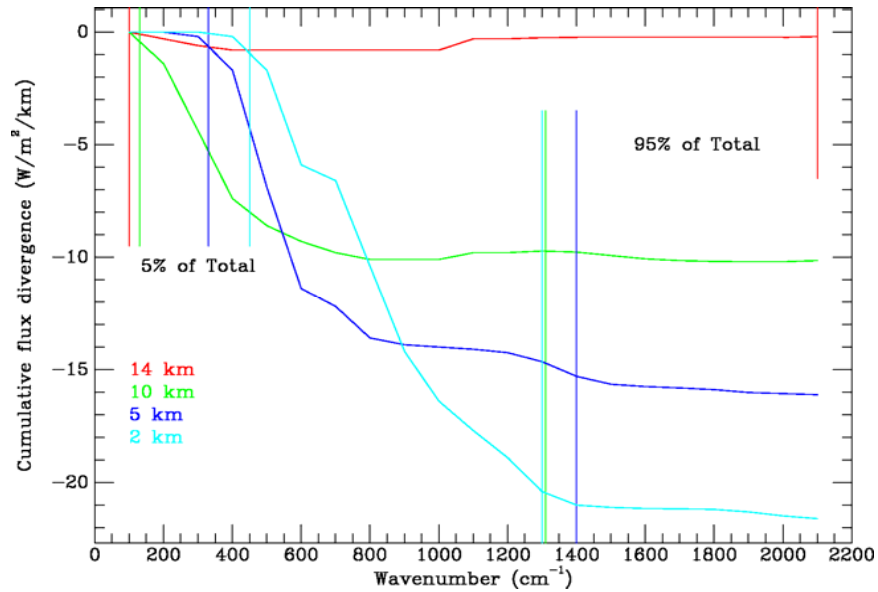

Most of the LW net flux and flux divergence falls between 100 and 1500 cm^{-1}, or 100 to 7 μm.

Baseline SW Parameters

- **Beamsplitter: Fused silica with compensator plate**
- **Aluminum optics (Ag coat?)**
- **Output channels: 2 identical outputs, each a 2-color stack**
- **Calibration sources: Tungsten lamps in integrating cavities**
- **SW detectors (3 to 0.3 μm):**
  - Maximum input power: ~581μW
  - NESR < 44 $\mu W/m^2\ cm^{-1}$
  - electronic bandpass: 45 to 450 Hz
  - sample rate at 1.5 * Nyquist: 1350 Hz.
  - NEP < 0.8 $nW/\sqrt{Hz}$
  - Dynamic range: > 15 bits for a single-color detector, will be less for each element of multicolor stack depending on crossover wavelength.

Detector Cone Solution

- **Use a short straight-sided cone to reflect extreme rays**
  - Doubles detector diameter but avoids possible systematic errors.

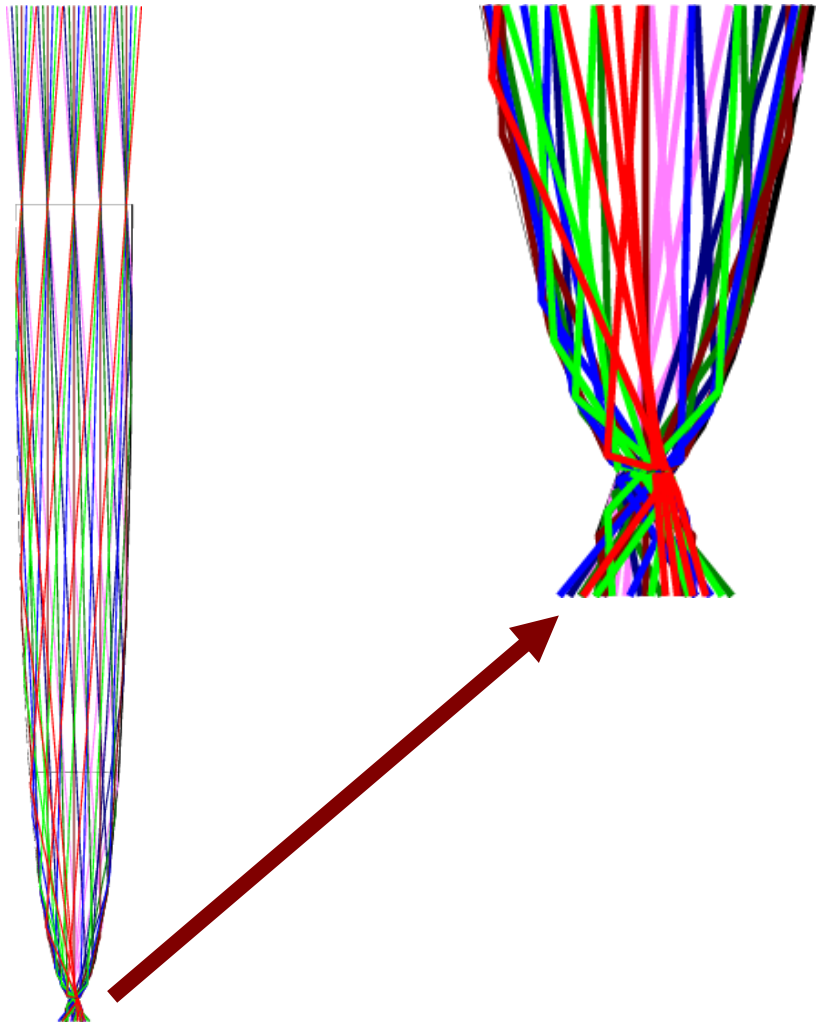

Improving Detector Cone Efficiency

- Using 1:1 imaging results in a large detector (with large NEP) or another Winston cone to couple a small detector to the f/6.5 beam.
- However, Winston cones produce some rays at very high angles of incidence: such rays are likely to reflect off detector.

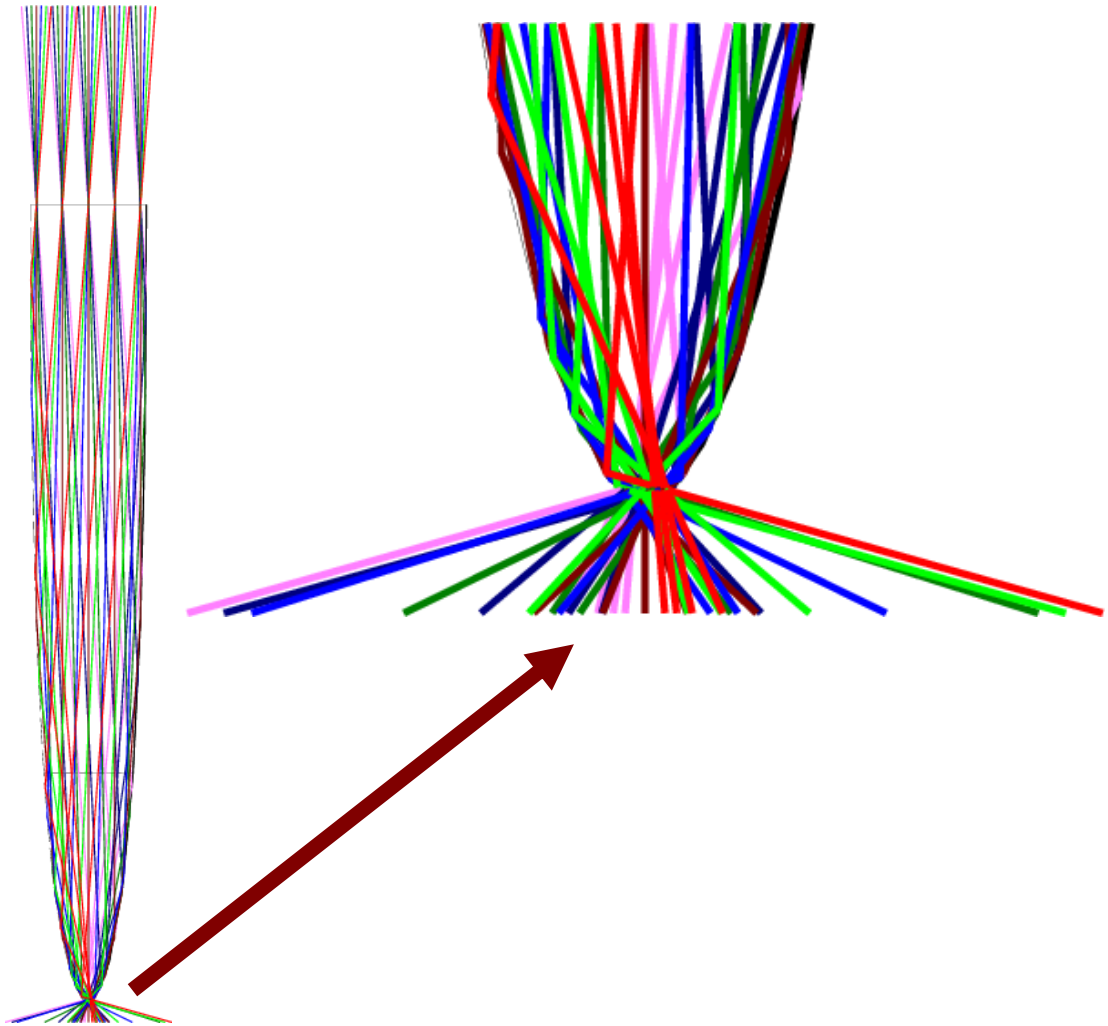

SW Cumulative Flux Plots

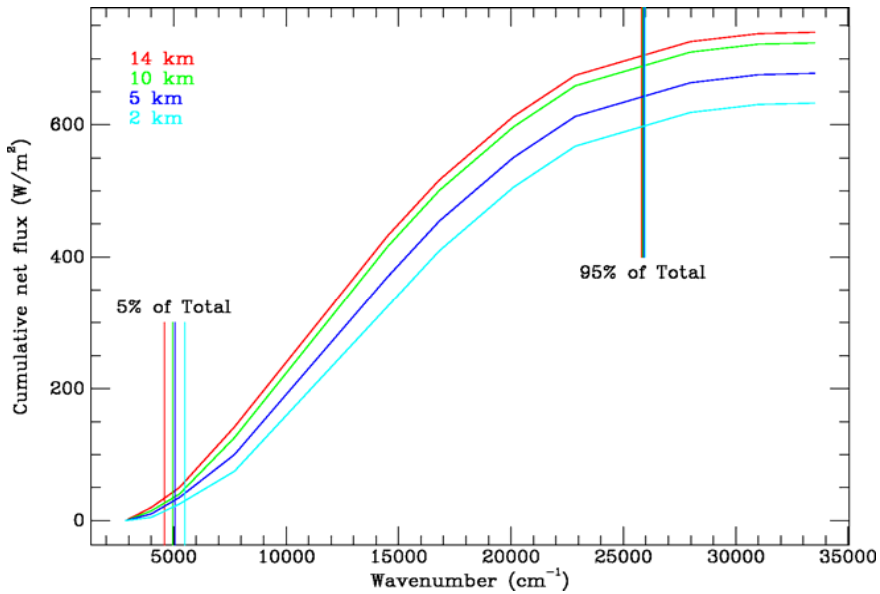

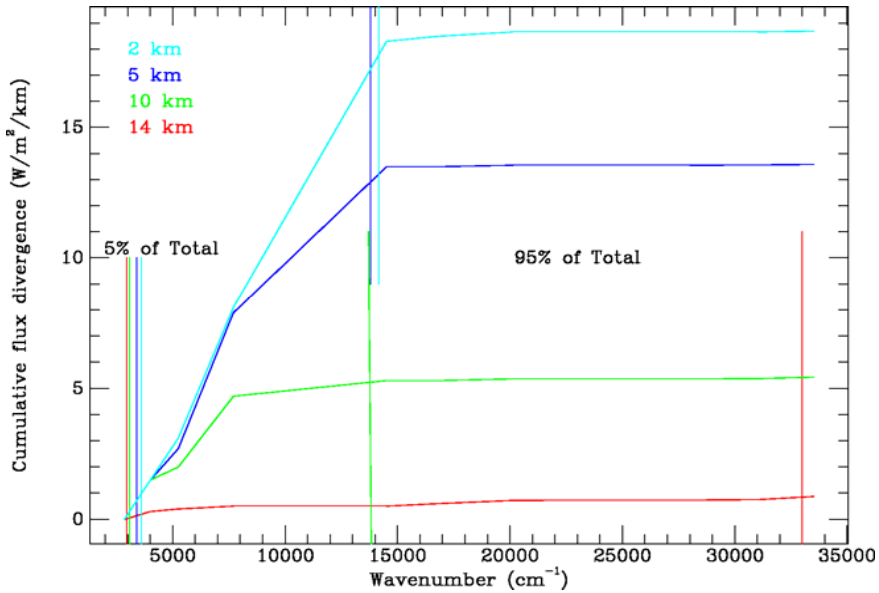

Most of the SW net flux and flux divergence falls between 3000 and 30,000 cm^{-1}, or 3 to 0.3 μm, and below the tropopause the upper limit drops to 25000 cm^{-1} or 0.4 μm.

Measurement Overview
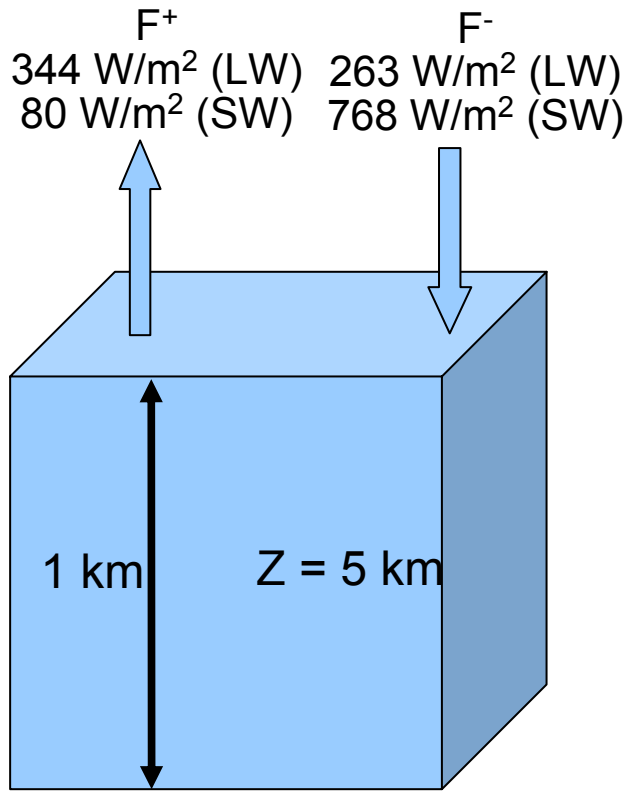
- **Consider a unit cube in the terrestrial atmosphere:**
  - Flux is the energy per unit frequency interval flowing through one face (F^+ or F^-)
  - Net Flux is the difference in energy flowing through one face in opposite directions ($F_z = F^- - F^+$ = -81 and +688 W/m2 for LW and SW)
  - Components of flux divergence are the differences in net flux through opposite faces (eg: dF_z/dz is the difference in net flux through the top and bottom faces), or -16.1 and 13.6 W/m^2/km for LW and SW, or 2.5 W/m^2/km total, roughly 0.3 K/day.
- **If the flux divergence is non-zero (what goes in is not the same as what comes out) then the cube is absorbing energy (heating up) or losing energy (cooling down.)**